MARS
god of war
INSTRUCTION
MANUAL
Gottlieb
AMUSEMENT GAMES
165 W. Lake Street Northlake, IL 60164
(312) 562-7400 Telex 72-8463
A Columbia Pictures Industries Company

INSTRUCTION MANUAL

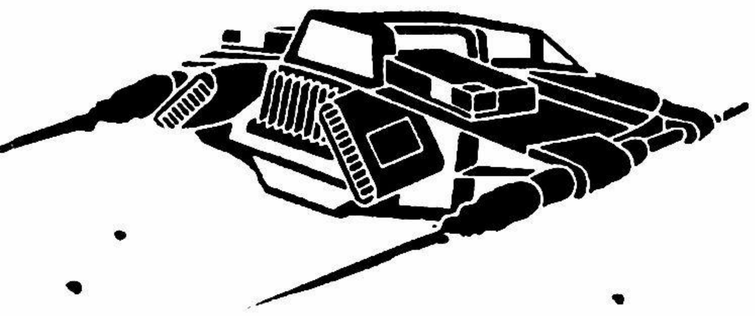

Gottlieb
AMUSEMENT GAMES
165 W. Lake Street Northlake, IL 60164
(312) 562-7400 Telex 72-8463
A Columbia Pictures Industries Company

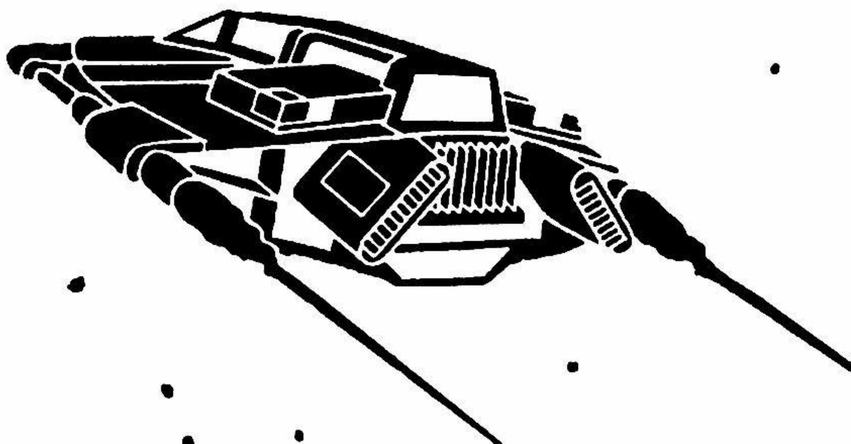

MARS, god of war (GAME #666)
INSTRUCTION MANUAL

TABLE OF CONTENTS

I. INSTALLATION 1

II. INITIALIZATION 3

III. GAME OPERATION 4

IV. GAME PLAY AND SCORING 5

V. GAME SPEECH 7

VI. GAME ADJUSTMENTS 8

VII. BOOKKEEPING AND SELF TEST 9

VIII. OPTIONS 11

IX. GENERAL INFORMATION 12

X. WIRING AND SCHEMATIC DIAGRAMS 15

MARS PROMS:

GAME PROM 666/1
SOUND/SPEECH PROMS 666/S1, 666/S2

I. INSTALLATION

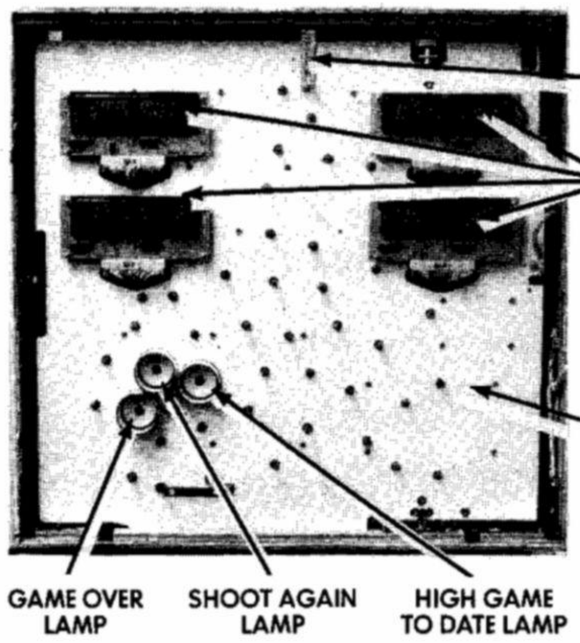

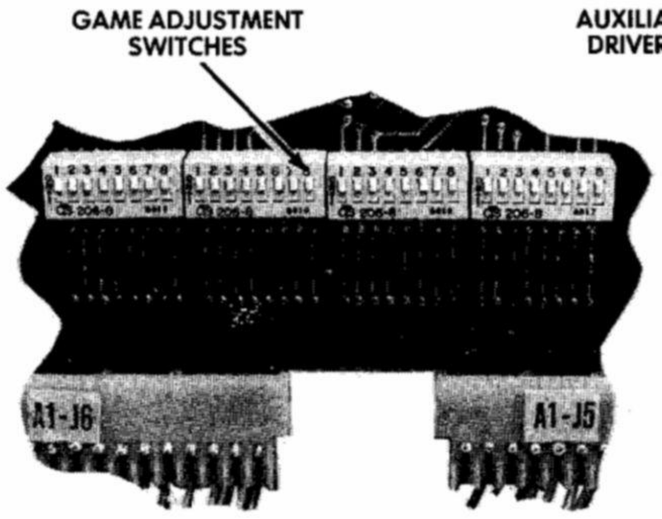

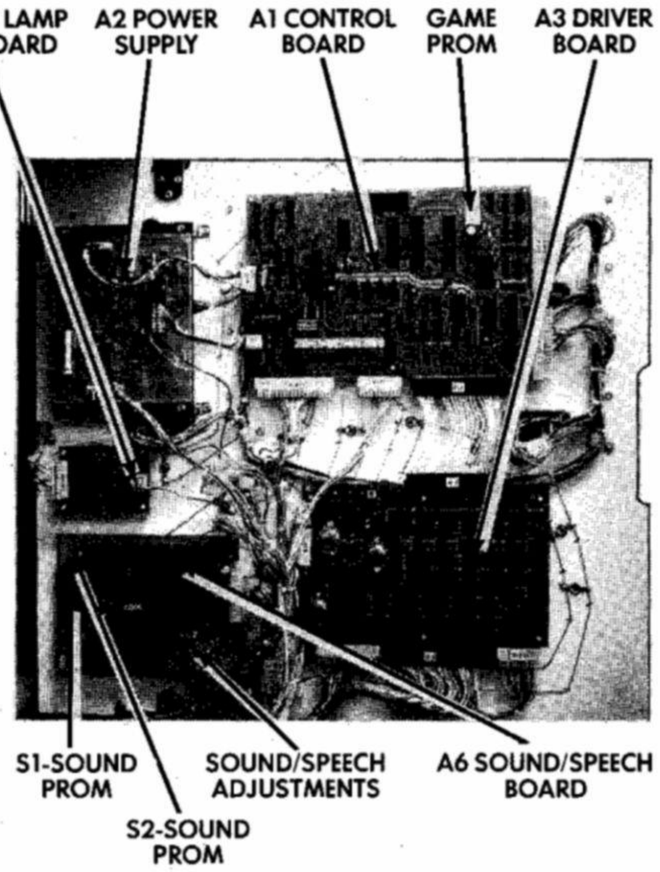

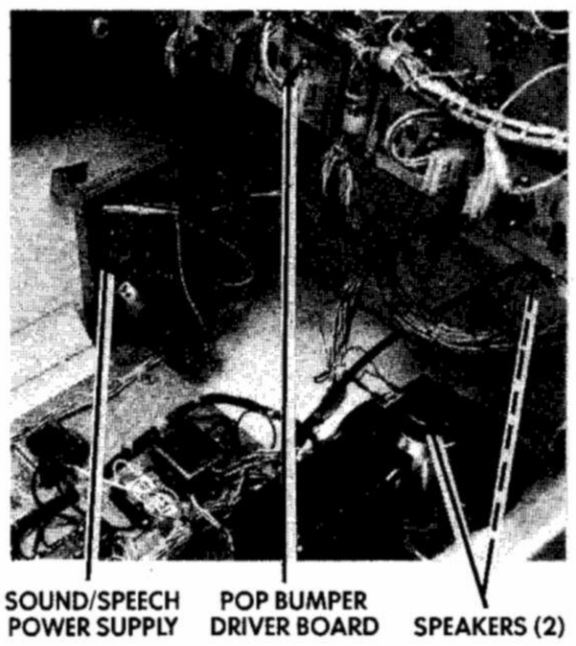

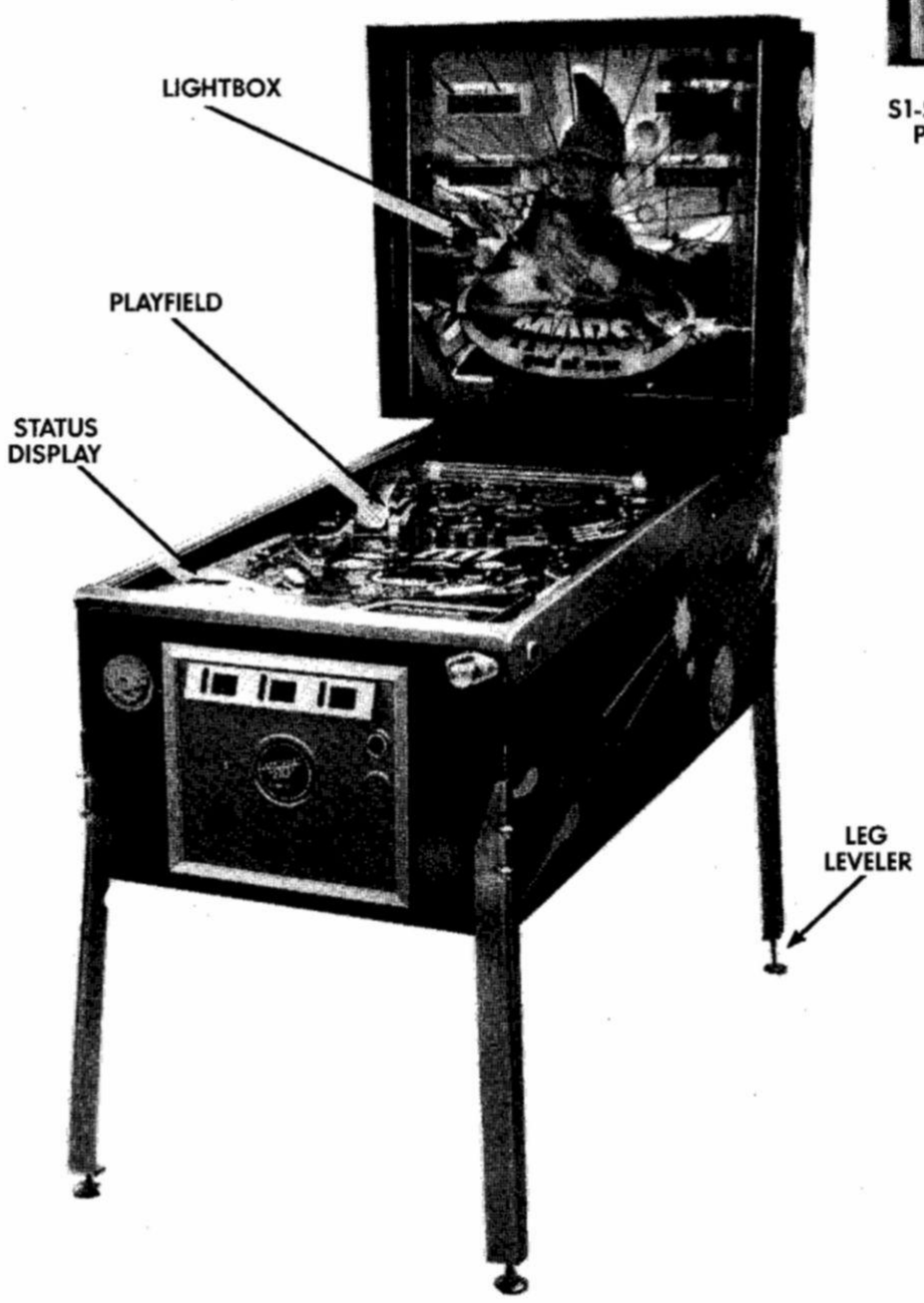

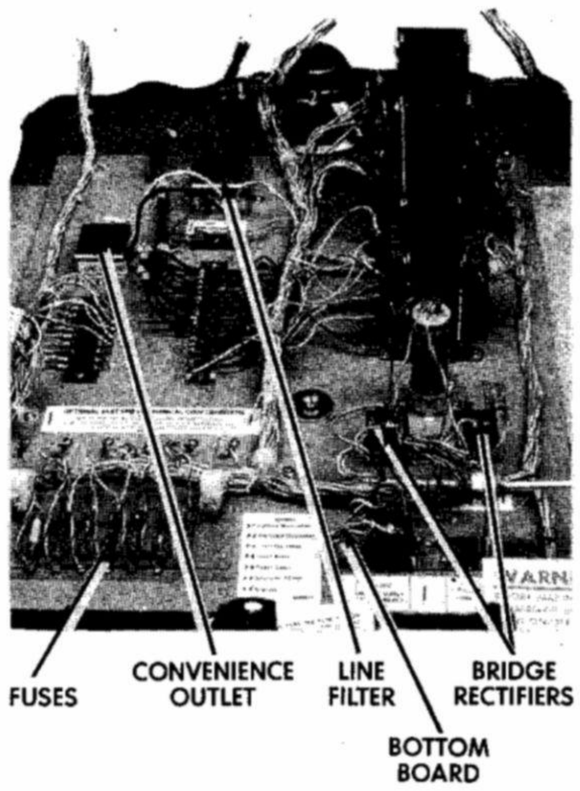

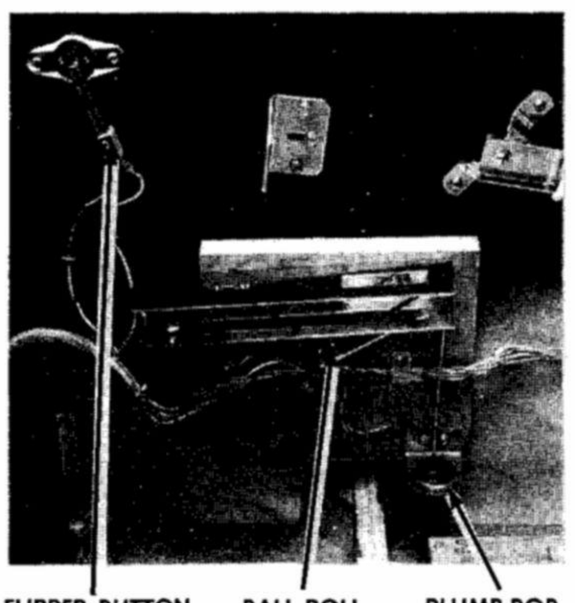

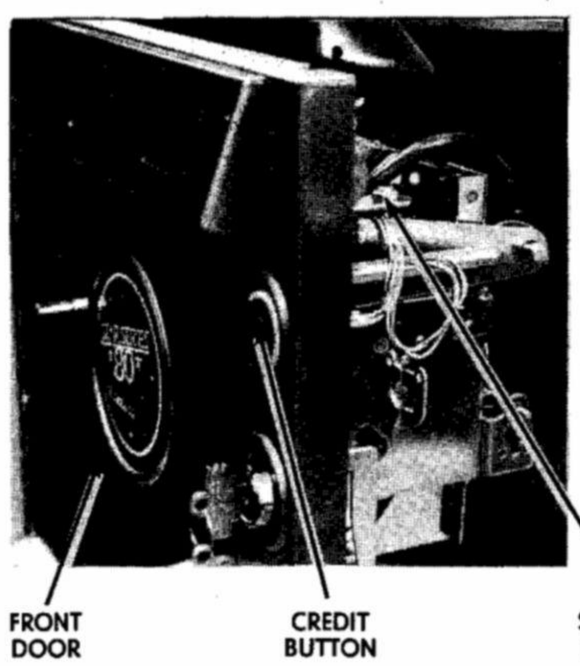

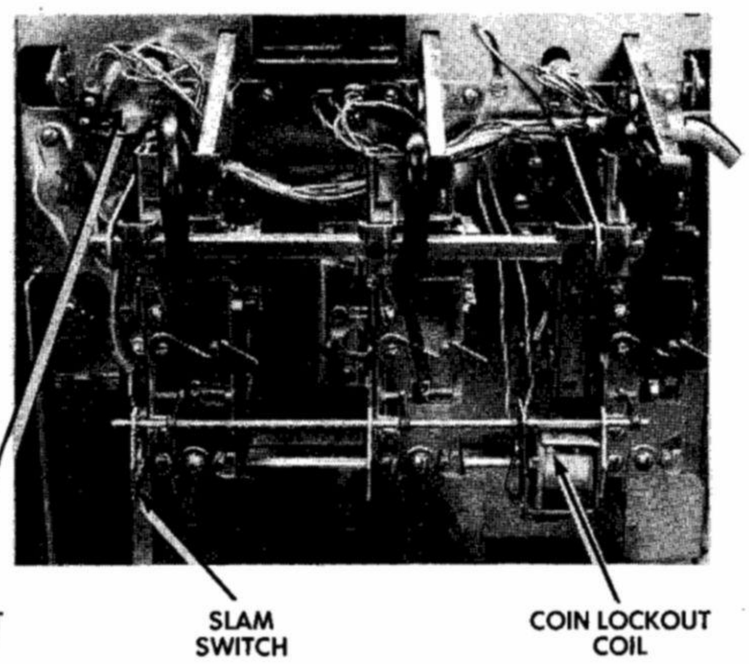

I. INSTALLATION

A. SET-UP

1. Bolt the legs to the cabinet.
2. Feed the line cord through the slot provided in the pedestal.
3. Place the lightbox atop the pedestal, making sure to engage the holding bracket.
4. Remove the backglass by inserting the key and unlocking the lightbox door. Lift the glass up and swing the bottom out.
5. Loosen and lower the shipping bracket at the top center of the lightbox insert panel.
6. Lift the insert; then swing it out.
7. Secure lightbox to cabinet with bolts and washers provided.
8. Connect all cables and secure with cable clamps provided.
9. Open the cabinet door and loosen the front moulding locking arm.
10. Remove the moulding from the playfield.
11. Slide glass forward and let all 3 balls drain to the outhole.

B. CHECK-OUT

1. Check that all cables are clear of moving parts.
2. Check for any loose wires.
3. Check switches for loose solder or other foreign matter.
4. Be certain all fuses are firmly seated.
5. Check transformers for any foreign matter across terminals.
6. Be sure transformer wiring corresponds to the supply voltage.
7. Check the setting of the normally open tilt switch on the underside of the playfield. One blade should be free-floating with a weight on the end.
8. Level the machine.
9. Adjust the plumb-bob tilt and the ball roll tilt to the sensitivity desired. Both tilt switches are normally open.
10. With the line cord unplugged, drop a coin into one of the chutes. It should be rejected.
11. Plug game into a properly grounded 3-wire receptacle ONLY!
12. Refer to Section VI to make all necessary game adjustments. NOTE: Switches #31 and #32 are special adjustments to make the game liberal or conservative.

LIGHTBOX HOLDING BRACKET

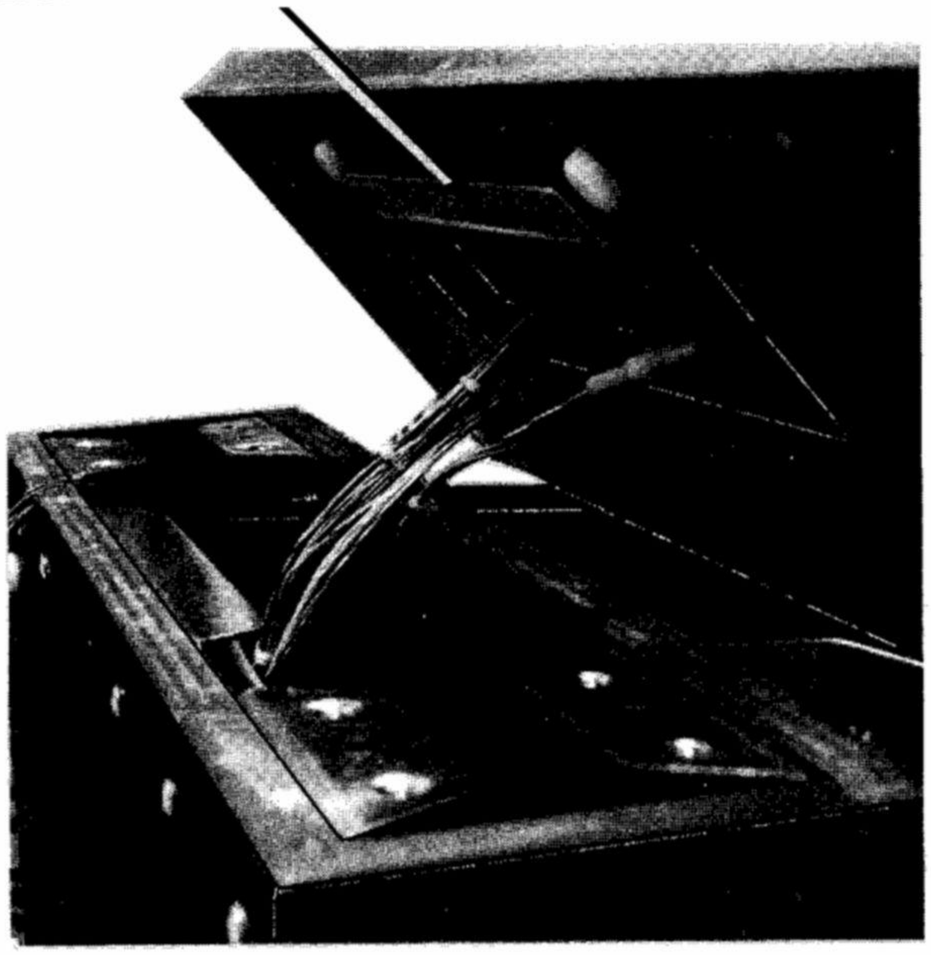

TILT RELAY (T)

GAME OVER RELAY (Q)

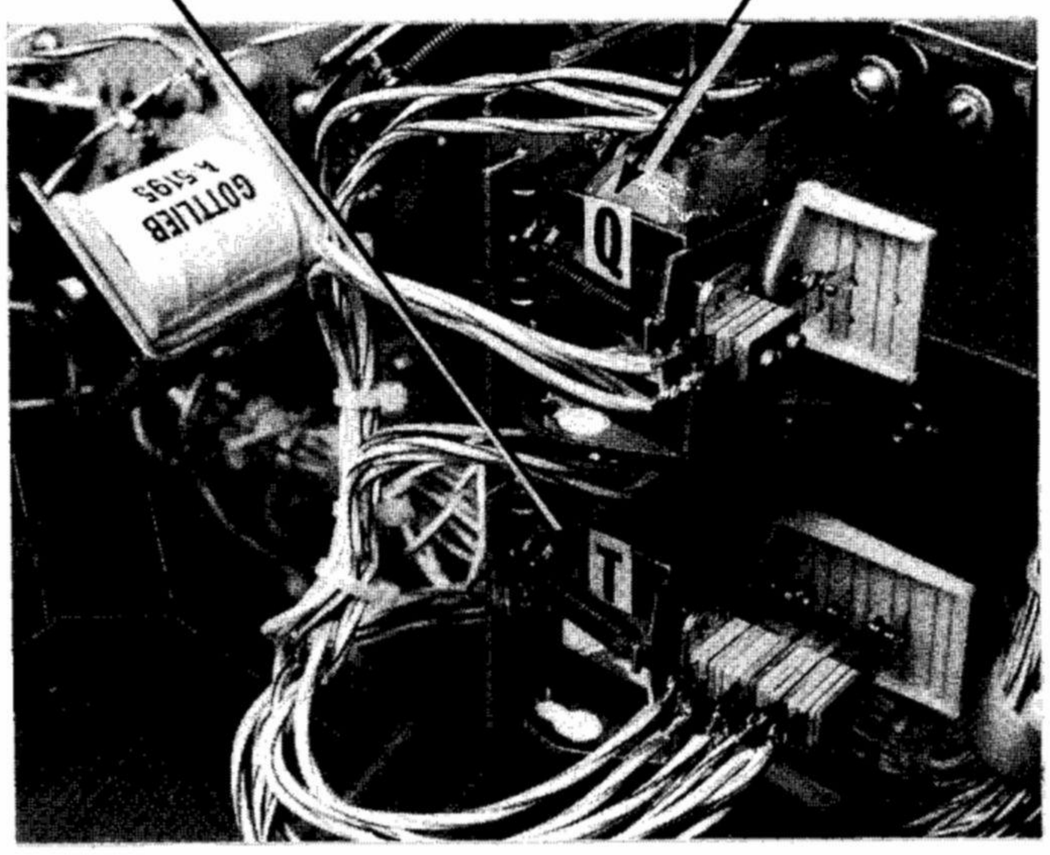

LOCATED ON PLAYBOARD UNDERSIDE

II. INITIALIZATION

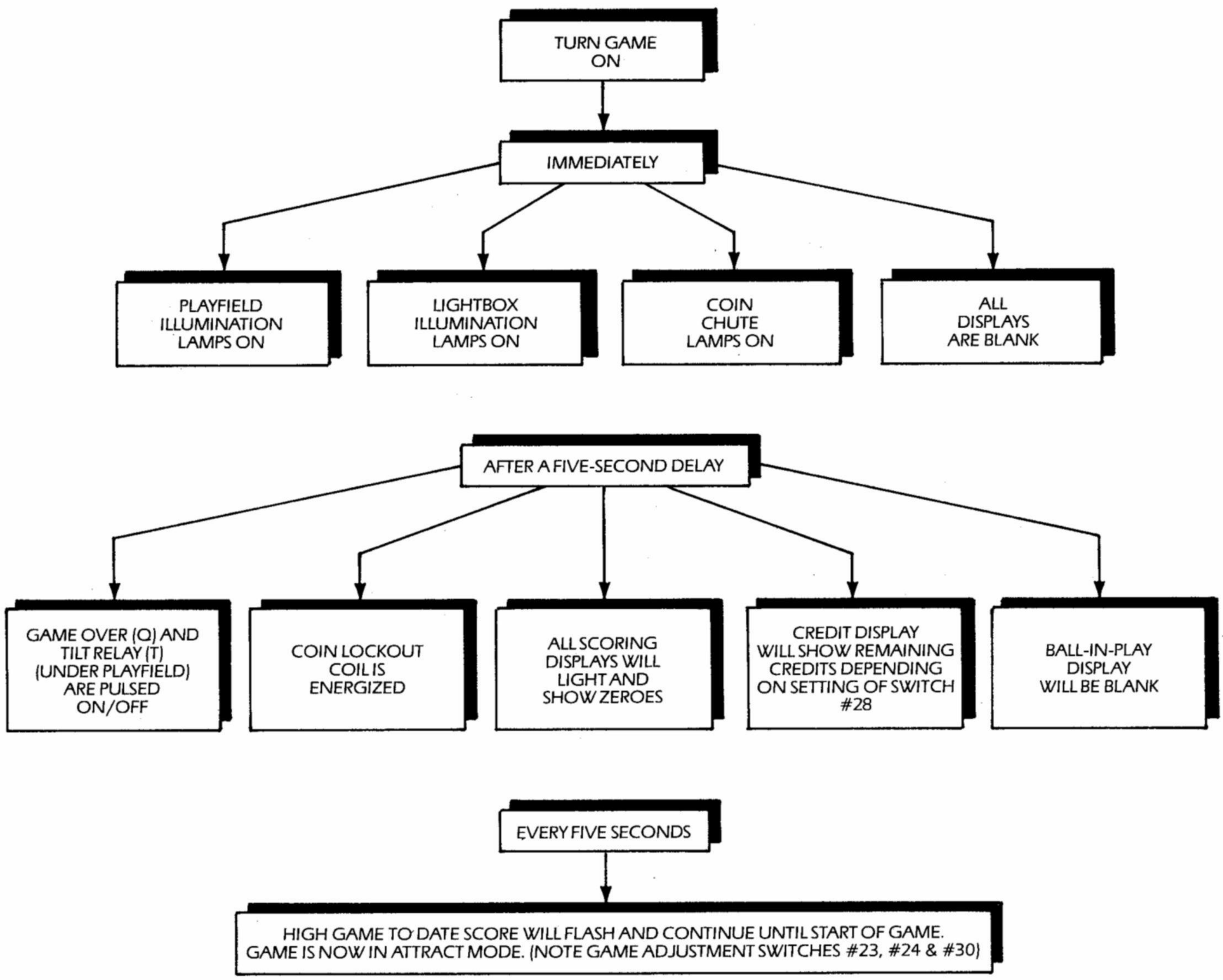

III. GAME OPERATION

A. GAME START

All three balls must be in the ball return trough to start a game.

1. Insert coins into coin chute.
   a. Coin chute tune is played (dependent on Switch #27).
   b. Total credits are displayed in status display (dependent on Switch #28).
2. Press Credit Button to start game.
   a. Credit tune or voice is played.
   b. Total credits displayed decrease by one.
3. All playfield features reset. Stargate resets to the up position.
4. The first player score display flashes a single zero.
5. When the ball is released to the shooter:
   a. Playfield controlled lamps flash.
   b. High Game to Date is briefly displayed in all four players' score displays.

III. GAME OPERATION

B. FIRST PLAYER

1. First player's score display flashes single zero.
2. The other players' displays are now blank.
3. A "1" appears on the ball-in-play display.
4. When the ball enters the outhole, the bonus is scored.
5. All captured balls will be ejected.

C. ADDITIONAL PLAYERS

1. Additional players are indicated by a zero (not flashing) in each corresponding player's display.
2. After the maximum number of players are added, or no more credits remain, the Credit Button has no effect.
3. Additional players can be added any time the first player's first ball is still in play. If the Credit Button is pressed after the first player's first ball has entered the outhole, all players' scores will be erased with the first player's score display showing a flashing zero, indicating a new game only for the first player.

D. EXTRA BALLS

1. When the SHOOT AGAIN lamp is lit, neither the player-up nor the ball-in-play display changes when the ball enters the outhole.
2. Only one extra ball per ball-in-play is given.

E. TILT MODE

1. Tilting the game results in a penalty, depending on the setting of Switch #29 (see Section VI).
2. When the game is tilted, all the playfield lamps and lightbox lamps go off except the LAUNCH lane lamps, spinner lamps, or the plastic tube LEDs depending which ones were on when the tilt occurred.
3. All captive balls are ejected and returned to the outhole.
4. All accumulated bonus and bonus multipliers are lost.

F. SLAM MODE

1. If the normally closed slam switch (located inside front door) is opened, the entire game is ended for all players.
2. The GAME OVER lamp comes on.
3. The entire switch matrix is inactive for three seconds.
4. All coins will be rejected if dropped into any coin chute during the three second delay.
5. All captive balls are ejected and returned to the outhole.
6. If the match feature exists (dependent on Switch #18), a replay can be won even if the game is slammed.
7. Game returns to the attract mode.

G. GAME OVER

1. When the last ball enters the outhole, the GAME OVER lamp continually flashes.
2. A random number appears in the ball-in-play display. If this number matches the last two digits in any player's score, a replay (dependent on Switch #18) is awarded.
3. HGTD is periodically flashed in all players displays. When a score higher than this is achieved, an award (dependent on Switches #23 and #24) is given.
4. All captive balls will be ejected and returned to the outhole.
5. The two target banks will reset.

IV. GAME PLAY AND SCORING

MULTI-BALL PLAY (HYPERFORCE)

- Completing center drop target bank activates left captive hole. ACTIVATE WARBASE lamp flashes.
- Completing right drop target bank activates right captive hole. ACTIVATE WARBASE lamp flashes.
- When either WARBASE is captured, the STARGATE is lowered and the plastic tube LED's are strobed.
- After a ball is captured in either captive hole, a ball is kicked to the ball shooter.
- The LAUNCH ball kicker lane flashes. This indicates that if a ball enters the lane either through the plastic tube or from the playfield, it and any captive ball(s) will be released for multi-ball play.
- Multi-ball play with two balls is achieved when either captive hole captures a ball and the next ball enters the LAUNCH ball kicker lane. The WARP I lamp turns on, indicating that all playfield scoring is 3X (3 times) the value of normal one-ball play. Playfield scoring reverts to normal one-ball scoring when a ball enters the outhole. WARP I lamp turns off.
- Multi-ball play with three balls is achieved when two balls are captured and the third ball enters the LAUNCH ball kicker lane. The WARP II lamp turns on, indicating that all playfield scoring is 5X (5 times) normal one-ball play. When the first ball enters the outhole, playfield scoring drops to WARP I value. WARP II lamp turns off and WARP I lamp turns on. When the second ball enters the outhole, the WARP I lamp turns off and one-ball play resumes.
- During multi-ball play, captive holes (WARBASES) cannot capture a ball. ACTIVATE WARBASE lamps remain off.
- If multi-ball is not achieved during a ball-in-play, all captive balls are released and will enter the outhole before the next ball is kicked to the ball shooter.
- Activated WARBASES for capturing balls remembered from ball-to-ball.

STARGATE FEATURE

- If no ball is captured, a ball that travels through the right return rollover will lower the STARGATE. If the ball enters the LAUNCH lane through the plastic tube or from the playfield before hitting a pop bumper, the player will be awarded 50,000 points. Hitting a pop bumper ends the STARGATE feature.

LAST CHANCE FEATURE

A captive ball will become a ball-in-play when the player's last ball-in-play enters the outhole through a side outlane. The last chance feature does not occur if an extra ball has been won.

- If one ball is captive, it will be released for play when the player's ball exits either outlane.
- If two balls are captive, only one ball will be released, corresponding to the outlane the player's ball exits.
- The LAST CHANCE feature can be disabled with game adjustment switch #31 in the off position.

EXTRA BALL

Entering a WARBASE when the warbase Extra Ball lamp is lit:

- Left WARBASE lights upper left return rollover for EXTRA BALL.
- Right WARBASE lights right spot target for EXTRA BALL.

SPECIAL

Entering a WARBASE when the warbase Special lamp is lit:

- Left WARBASE will light left outlane for SPECIAL.
- Right WARBASE will light right outlane for SPECIAL.
- Specials can be relit on the same ball-in-play.

MULTIPLIERS

- Bonus multipliers (BONUS BLASTERS) and WARBASE score multipliers are advanced by either completing the M-A-R-S rollover sequence or entering the LAUNCH lane.

- When the multiplier reaches 5X, the M-A-R-S rollovers remain unlit, and all pop bumpers are lit.

ROLLOVERS AND SPOT TARGET

Top Rollovers and Lower Return Rollovers

- Score 100 points unlit.
- Score 1000 points and ADD BONUS when lit.
- Two lower return rollovers spot the A and R of M-A-R-S.
- M-A-R-S sequence remembered from ball-to-ball.

Outlane Rollovers

- Score 5000 points and ADD BONUS.
- Award SPECIAL when lit.
- Award LAST CHANCE feature on last ball.

Spot target and Upper Left Return Rollovers

- Score 500 points.
- Awards EXTRA BALL when lit.

CAPTIVE HOLES (WARBASES)

- Score 1000 points unlit.
- Score 2000-5000 points when 2X-5X lamps are lit.
- Capture ball when ACTIVATE WARBASE lamp is flashing.
- See **EXTRA BALL** and **SPECIAL.**

10-POINT SWITCHES (score 10 points)

SPINNER

- Score 100 points unlit.
- Score 1000 points and ADD BONUS when lit.
- Advance spinner lights (See **DROP TARGETS**).
- Spinner lights remembered from ball-to-ball (3-ball only).

POP BUMPERS

- Score 100 points unlit.
- Score 1000 points when lit.

LAUNCH lane (upper right ball kicker)

- Score 5000 points, ADD BONUS, and advance MULTIPLIER.
- Launch captive balls when flashing.
- Awards 50,000 points for **STARGATE FEATURE.**

DROP TARGETS

- Score 100 points unlit.
- Score 1000 points when lit.
- Add BONUS.
- Light corresponding spinner lamp.
- Completed target bank resets.
- See **MULTI-BALL PLAY.**

OTHER FEATURES

- Right flipper button rotates M-A-R-S and rotates pop bumper lights.
- 3-Ball Play:
  - Bonus maximum is 29,000 points.
  - Game Adjustment Switch #32:
    ON (LIBERAL)—Light warbase Special Lamp when multiplier reaches 4X. Light warbase Extra Ball lamp when multiplier reaches 3X.
    OFF (Conservative)—Light warbase Special lamp when multiplier reaches 5X. Light warbase Extra Ball lamp when multiplier reaches 4X.
- 5-Ball Play:
  - Bonus maximum is 19,000 points.
  - Light warbase Special lamp when multiplier reaches 5X.
  - Light warbase Extra Ball lamp when multiplier reaches 4X.

HIGH GAME TO DATE

- If the High Game To Date is 990,000 or greater at the start of a new game, the High Game To Date will automatically reset to 770,000.

V. GAME SPEECH

ATTRACT MODE	OCCURRENCE
"EARTHLING, I AM SUPREME."	Random.
"THE POWER OF MARS CHALLENGES YOU."	Random.
"CAN YOU SURVIVE BATTLE WITH MARS?"	Random.

GAME MODE	OCCURRENCE
"PREPARE FOR BATTLE."	a Pressing credit button. b When ball lands in unlit warbase.
"WARBASE RIGHT, DEFENSES DESTROYED."	Completing right drop target bank.
"WARBASE LEFT, DEFENSES DESTROYED."	Completing center drop target bank.
"WARBASE RIGHT SECURED."	When ball is captured in right warbase.
"WARBASE LEFT SECURED."	When ball is captured in left warbase.
"SHOOT STARGATE FOR HYPERFORCE."	a When left or right warbase is captured and Stargate drops.
"ATTACK."	Ball enters launch lane; a No balls secured, repeats twice. b One or two balls secured, repeated once for each ball as it is released.
"HYPERFORCE I."	a When two-ball play is initiated. b During three-ball play, when one ball enters the outhole.
"HYPERFORCE II."	When three-ball play is initiated.
"TILT, TILT, TILT."	When game is tilted.
"OOOooo."	When game is slammed.

GAME OVER MODE	OCCURRENCE
"BATTLE IS OVER. MARS IS SUPREME."	No high score level is achieved.
"MARS CONCEDES. I DEMAND A REMATCH."	First high score level is achieved.

VI. GAME ADJUSTMENTS

A. CONTROL BOARD SWITCH ADJUSTMENTS

There are 32 switches on the control board which permit adjustment of the game parameters. These switches are contained in four packages of eight switches each, as shown below:

S1–S8	S9–S16	S17–S24	S25–S32

Switch settings are recognized only during normal power-up and when starting the first player of a new game (not when additional players are added).

SWITCHES — **COIN CHUTE ADJUSTMENTS**

S1	S2	S3	S4 — Left Chute
S5	S6	S7	S8 — Right Chute
S9	S10	S11	S12 — Center Chute

NOTE: FOR GERMAN GAMES ONLY, switches S5-S8 adjust the center chute and switches S9-S12 adjust the right chute.

				COINS/CREDITS
OFF	OFF	OFF	OFF	1/1
OFF	OFF	OFF	ON	1/2
OFF	OFF	ON	OFF	1/3
OFF	OFF	ON	ON	1/4
OFF	ON	OFF	OFF	1/5
OFF	ON	OFF	ON	1/6
OFF	ON	ON	OFF	1/7
OFF	ON	ON	ON	1/8
ON	OFF	OFF	OFF	1/9
ON	OFF	OFF	ON	2/1*
ON	OFF	ON	OFF	2/2*
ON	OFF	ON	ON	2/3*
ON	ON	OFF	OFF	2/4*
ON	ON	OFF	ON	2/5*
ON	ON	ON	OFF	1/1 AND 2/3
ON	ON	ON	ON	3/1*

*NO CREDITS UNTIL LAST COIN IS INSERTED.

SWITCH 13 — EXTRA CREDITS
ON ..... Adds 9 credits to center coin chute setting
OFF ..... No effect
NOTE: FOR GERMAN GAMES ONLY, Switch 13 adds 9 credits to the **right** coin chute setting, when ON.

SWITCH 14 — COIN CHUTE CONTROL
ON ..... Left and Right Chutes Same
OFF ..... Left and Right Chutes Separate
NOTE: FOR GERMAN GAMES ONLY, Switch 14 controls the left and **center** coin chutes.

SWITCHES 15 16 — MAXIMUM CREDITS

OFF	OFF	8
OFF	ON	10
ON	OFF	15
ON	ON	25

SWITCH 17 — BALLS PER GAME
ON 3
OFF 5

SWITCH 18 — MATCH FEATURE
ON ..... ON
OFF ..... OFF

SWITCH 19 — REPLAY LIMIT
ON ..... Limits each player to one replay per game
OFF ..... No replay limit

SWITCH 20 — NOVELTY MODE
ON ..... Playfield SPECIAL and EXTRA BALL features award 50,000 points and 5 knocks. High score, high game to date, and match features disabled.
OFF ..... Normal game mode
NOTE: SWITCH 20 overrides SWITCH 21.

SWITCH 21 — GAME MODE
ON ..... Extra Ball
OFF ..... Replay
NOTE: IF SWITCH 21 is ON, the high game to date and match awards are disabled.

SWITCH 22 — PLAYFIELD SPECIAL
ON ..... Awards Extra Ball
OFF ..... Awards Special

SWITCHES 23 24 — HIGH GAME TO DATE

OFF	OFF	Not displayed—no award
OFF	ON	Displayed—no award
ON	OFF	Displayed—awards 2 replays
ON	ON	Displayed—awards 3 replays

SWITCH 25 — MUST BE ON
ON .....
OFF .....

SWITCH 26 — REPLAY BUTTON TUNE?
ON ..... Yes
OFF ..... No

SWITCH 27 — COIN SWITCH TUNE?
ON ..... Yes
OFF ..... No

SWITCH 28 — CREDITS DISPLAYED?
ON ..... Yes
OFF ..... No

SWITCH 29 — TILT PENALTY
ON ..... Ball in play only
OFF ..... Game over

SWITCH 30 — ATTRACT FEATURES
ON ..... ON
OFF ..... OFF

SWITCHES 31, 32 — LIBERAL-CONSERVATIVE

(SEE SECTION VI, B)

B. LIBERAL-CONSERVATIVE ADJUSTMENTS

- Game Adjustment Switch #31
  ON (Liberal)—Last Chance feature enabled.
  OFF (Conservative)—Last Chance feature disabled.

- Game Adjustment Switch #32
  ON (Liberal)—Light warbase Special Lamp when multiplier reaches 4X. Light warbase Extra Ball lamp when multiplier reaches 3X.
  OFF (Conservative)—Light warbase Special lamp when multiplier reaches 5X. Light warbase Extra Ball lamp when multiplier reaches 4X.

VI. GAME ADJUSTMENTS

C. POST ADJUSTMENTS

There are two post adjustments that provide liberal or conservative game play. See page 31 (Playboard Information) for post positioning.

THE SOUND/SPEECH BOARD (A6) USED IN MARS GAME #666 IS NOT INTER-CHANGEABLE WITH SOUND BOARDS (A6) USED IN PREVIOUS SYSTEM 80 GAMES.

D. SOUND/SPEECH ADJUSTMENTS

IMPORTANT: All potentiometers (pots) are factory adjusted for maximum volume. Damage to board components may result if settings are changed.

SWITCH BANK (SB1) SETTINGS:

SB1-1	NOT USED	
SB1-2	NOT USED	
SB1-3	SB1-4	Attract Mode Speech
OFF	OFF	Disabled.
ON	OFF	Every 10 Seconds.
OFF	ON	Every 2 Minutes.
ON	ON	Every 4 Minutes.
SB1-5	ON	Background sound enabled.
	OFF	Background sound disabled.
SB1-6	ON	All Speech enabled.
	OFF	All Speech disabled.
SB1-7	NOT USED	
SB1-8	NOT USED	

SOUND/SPEECH BOARD (A6) TEST SEE SECTION IX, E PAGE 14.

VII. BOOKKEEPING AND SELF TEST

The circuitry in this game helps the operator perform many bookkeeping and game test functions. The information is shown one step at a time in the first player's score display, while the step number is shown in the credit display (refer to flow chart Section VII, C for order and function).

A. BOOKKEEPING

- Pressing the SELF-TEST button inside the front door begins the bookkeeping which are steps 01 through 15.
- The data in any of these steps may be reset to zero while it is displayed by pressing the replay button on the front door.
- **The SELF-TEST button must then be pressed to enter zero into memory.**
- All bookkeeping information is checked against itself to insure that it is correct. If any data is invalid or bad, that information will flash while it is displayed.
- If the SELF-TEST button is not pressed within 60 seconds of each step, the game will return to the attract mode.

B. SELF-TEST

- Steps 16 through 20 are SELF-TEST or game tests the operator can use for quick troubleshooting.
- All the tests are explained in the flow chart (Section VII, C).
- Each test can be repeated by pressing the replay button on the front door. This starts the test for another 60 seconds.
- If the SELF-TEST button or the replay button is not pressed within 60 seconds, the game will return to the attract mode.

VII. BOOKKEEPING AND SELF TEST

C. FLOW CHART

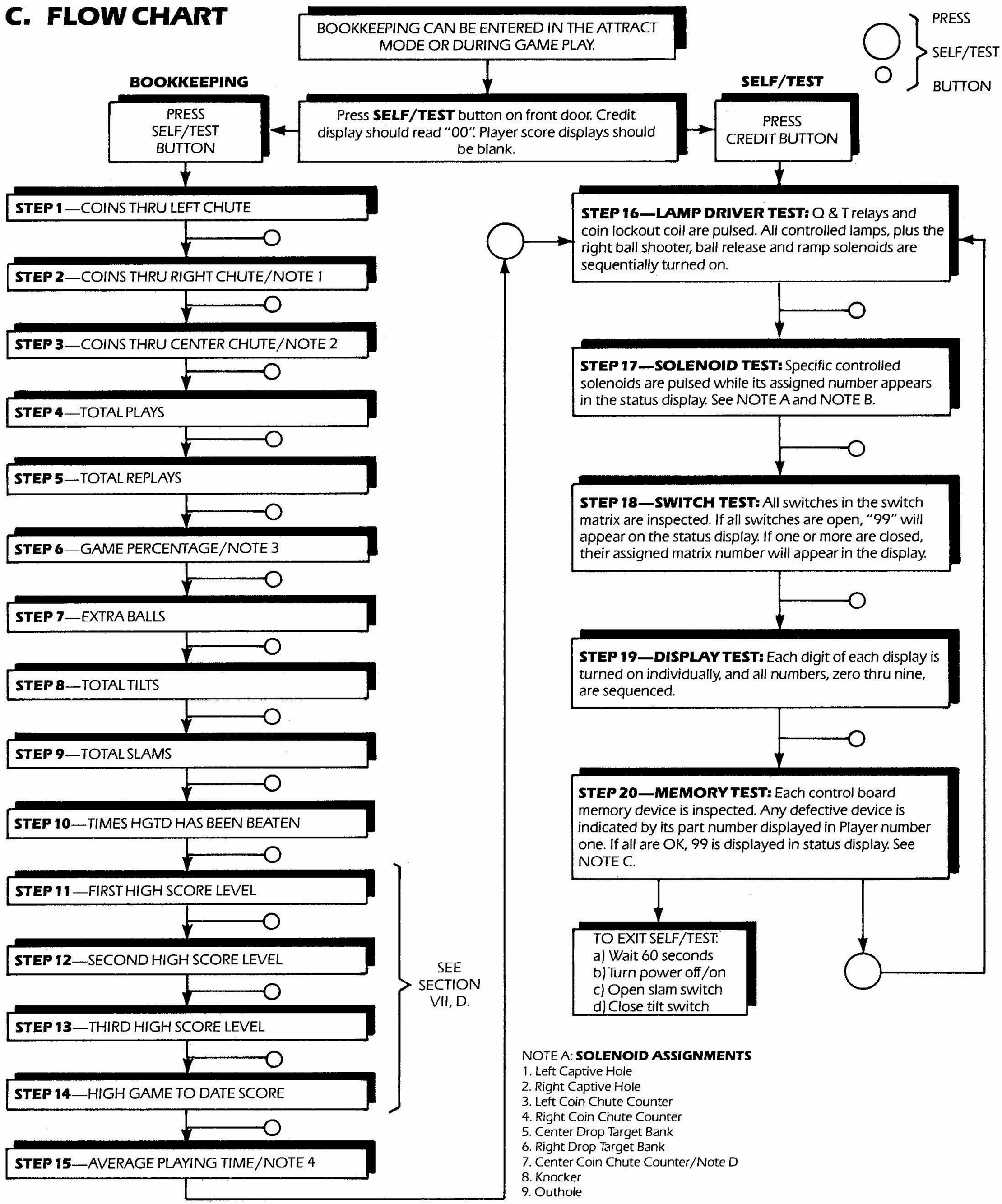

1. If control board switch #14 is on, Steps 01 and 02 are added together and displayed in Step 01.
2. IN GERMAN GAMES ONLY, Step 02 displays total coins thru center chute, and Step 03 displays total coins thru right chute.
3. If Step 06 is reset, Steps 04 and 05 must also be reset.
4. If Step 15 is reset, Step 04 must also be reset.

NOTE A: **SOLENOID ASSIGNMENTS**

1. Left Captive Hole
2. Right Captive Hole
3. Left Coin Chute Counter
4. Right Coin Chute Counter
5. Center Drop Target Bank
6. Right Drop Target Bank
7. Center Coin Chute Counter/Note D
8. Knocker
9. Outhole

NOTE B: Mechanical coin counters are optional and are not pulsed during solenoid test.

NOTE C: James Bond and later System 80 games will display 7641-1 for a bad 2716 game prom.

NOTE D: FOR GERMAN GAMES ONLY, solenoid #4 is assigned to center coin chute and solenoid #7 is assigned to right coin chute.

VII. BOOKKEEPING AND SELF TEST

D. HOW TO RESET HIGH SCORE LEVELS OR HIGH GAME TO DATE SCORES

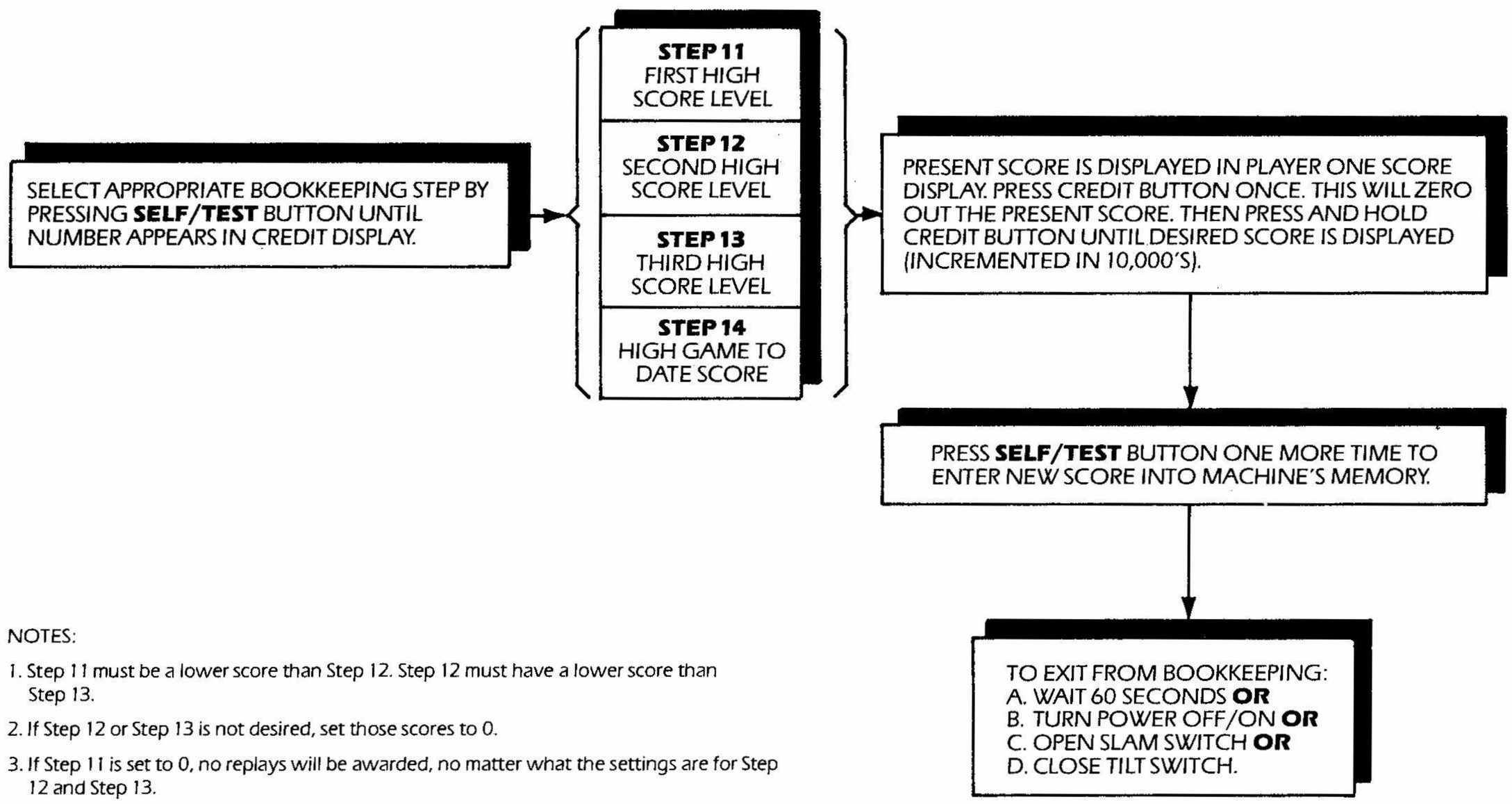

NOTES:

1. Step 11 must be a lower score than Step 12. Step 12 must have a lower score than Step 13.
2. If Step 12 or Step 13 is not desired, set those scores to 0.
3. If Step 11 is set to 0, no replays will be awarded, no matter what the settings are for Step 12 and Step 13.

VIII. OPTIONS

A. ELECTRO-MECHANICAL COIN COUNTERS

Electro-mechanical coin counters may be installed on the bottom board, directly behind the 7-position fuse block. Solder lugs are provided which will connect the counters to the electronic circuitry.

1. Position the counter and secure it to the bottom board. Mounting holes are spotted for most standard 24 volt counters.
2. CAUTION: A 1N4004 diode must be connected across each counter with the cathode lead connected to the solder lug with the RED-BLACK-BLACK wire.
3. Connect one counter lead to each of the two solder lugs provided for each counter.
4. The counter should increment once when the respective coin chute switch is closed.

IX. GENERAL INFORMATION

A. PRINTED CIRCUIT BOARDS ARE DESIGNATED AS FOLLOWS:

A1 — Control Board

A2 — Power Supply

A3 — Driver Board

A4 — Score Displays (4)

A5 — Status Display

A6 — Sound/Speech Board

A8 — Pop Bumper Driver Boards (4)

A11 — Auxiliary Lamp Driver Board—Lightbox

A12 — Auxiliary Lamp Driver Board—Playfield

A13 — LED Display Strip

Printed circuit board connectors will be labeled AX-JX. For example, A3-J4 is the connector J4 on the driver board (A3).

B. WIRE COLORS ARE SHOWN AS NUMBERS:

0 Black	5 Green
1 Brown	6 Blue
2 Red	7 Purple
3 Orange	8 Slate
4 Yellow	9 White

For example, 688 is a BLUE-SLATE-SLATE striped wire.

C. FUSES

BOTTOM BOARD

F1	Lightbox Illumination	10 Amp
F2	Playboard Illumination	7-1/2 Amp
F3	Controlled Lamps	8 Amp SLO-BLO
F4	Sound Board	2 Amp SLO-BLO
F5	Power Supply	5 Amp SLO-BLO
F6	Solenoids (24 VDC)	8 Amp SLO-BLO
F7	Displays	1/4 Amp SLO-BLO
F8	Primary Fuse 110 VAC Primary Fuse 220 VAC	5 Amp SLO-BLO 2.5 Amp SLO-BLO

SOUND/SPEECH POWER SUPPLY

F9	Sound, Speech	1 Amp SLO-BLO

PLAYBOARD

F10	Left Top Pop Bumper	2 Amp SLO-BLO
F11	Right Top Pop Bumper	2 Amp SLO-BLO
F12	Left Bottom Pop Bumper	2 Amp SLO-BLO
F13	Right Bottom Pop Bumper	2 Amp SLO-BLO
F14	Right and Center Drop Target Bank	2 Amp SLO-BLO
F15	Left and Right Captive Holes and Outhole	1 Amp SLO-BLO
F16	Right Launch Lane	2 Amp SLO-BLO
F17	Ball Release	1 Amp SLO-BLO
F18	Ramp	2 Amp SLO-BLO

IX. GENERAL INFORMATION

D. COIL CHART

SOLENOID COILS

PART NUMBER	GENERAL USAGE*	RESISTANCE (ohms)	NUMBER OF TURNS	WIRE GAUGE	WRAPPER COLOR
A-1496	KICKING RUBBERS POP BUMPERS	2.95	635	#23	Yellow
A-5194	GONG	4.5	780	#24	Blue
A-5195	KNOCKER, HOLE KICKER	12.3	1305	#26	White
A-16570	HOLE KICKER, OUTHOLE	15.5	1450	#27	Green
A-17875	FLIPPERS	2.8/40.0	560/1100	#24/31	Yellow
A-17891	5 BANK RESET	3.35	850	#22	White
A-18102	3 BANK RESET, 7 BANK RESET USES 2	9.0	1430	#24	Red
A-18318	4 BANK RESET	6.7	1130	#24	Orange
A-19300	BALL KICKER	7.8	1075	#25	Orange
A-20095	SUPER FLIPPER	1.55/35.5	450/900	#22/31	Red
RELAY COILS					
A-16890	Q, T, AND COIN LOCKOUT RELAYS	231.0	4000	#35	Orange
A-17564	GATE RELAY	156.0	3400	#34	White
A-18642	MEMORY/ DROP TARGETS	58.0	1590	#33	White

*Coils may vary from game to game. Check game manual for exact coil usage.
Normally, all coils are powered by +24 VDC.

E. SOUND/SPEECH BOARD (A6) TEST

1. Pressing the test button on the sound board will initiate the test.
2. The test must be completed to enable the sound board or game power must be turned off/on.
3. Words in bold print with quotation marks are the voice responses the sound board issues at specific points in the test.

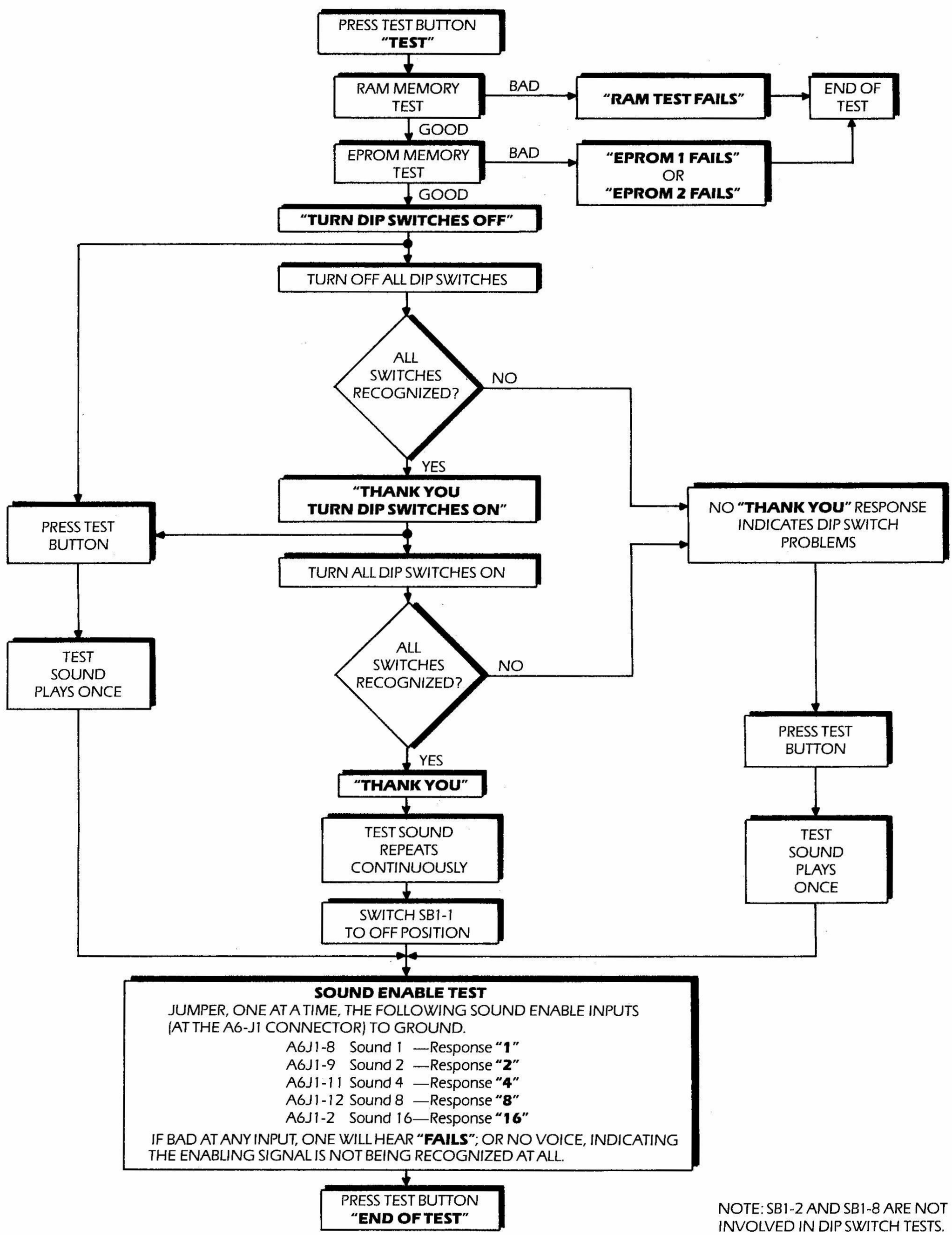

NOTE: SB1-2 AND SB1-8 ARE NOT INVOLVED IN DIP SWITCH TESTS.

X. WIRING AND SCHEMATIC DIAGRAMS, PARTS LISTS

TABLE OF CONTENTS

PAGE

CONTROL BOARD (A1)
- COMPONENT LOCATION AND PARTS LIST 16
- SCHEMATIC DIAGRAM 17

DRIVER BOARD (A3)
- COMPONENT LOCATION AND PARTS LIST 20
- SCHEMATIC DIAGRAM 21

SPEECH/SOUND BOARD (A6)
- COMPONENT LOCATION AND PARTS LIST 23
- SCHEMATIC DIAGRAM 24

AUXILIARY LAMP DRIVER BOARD (A11)
- COMPONENT LOCATION AND PARTS LIST 26
- SCHEMATIC DIAGRAM 26

LIGHT BOX WIRING 27

6-DIGIT DISPLAY (A4)
- COMPONENT LOCATION AND PARTS LIST 29
- SCHEMATIC DIAGRAM 29

4-DIGIT DISPLAY (A5)
- COMPONENT LOCATION AND PARTS LIST 30
- SCHEMATIC DIAGRAM 30

PLAYBOARD
- PLAYBOARD INFORMATION 31
- PLAYBOARD SWITCH AND LAMP ASSIGNMENTS 32
- PLAYBOARD SWITCH MATRIX 33
- PLAYBOARD ILLUMINATION AND SOLENOIDS 34

POP BUMPER DRIVER BOARD (A8)
- COMPONENT LOCATION AND PARTS LIST 36
- SCHEMATIC DIAGRAM 36

SOUND/SPEECH BOARD (A6) POWER SUPPLY
- COMPONENT LOCATION AND PARTS LIST 36
- SCHEMATIC DIAGRAM 37

BOTTOM BOARD AND CABINET SCHEMATIC 37

POWER SUPPLY (A2)
- COMPONENT LOCATION AND PARTS LIST 39
- SCHEMATIC DIAGRAM 40

AUXILIARY LAMP DRIVER BOARD (A12)
- COMPONENT LOCATION AND PARTS LIST 41
- SCHEMATIC DIAGRAM 41

LED DISPLAY STRIP (A13)
- COMPONENT LOCATION AND PARTS LIST 41

X. WIRING AND SCHEMATIC DIAGRAMS, PARTS LISTS

CONTROL BOARD (A1) COMPONENT LOCATION

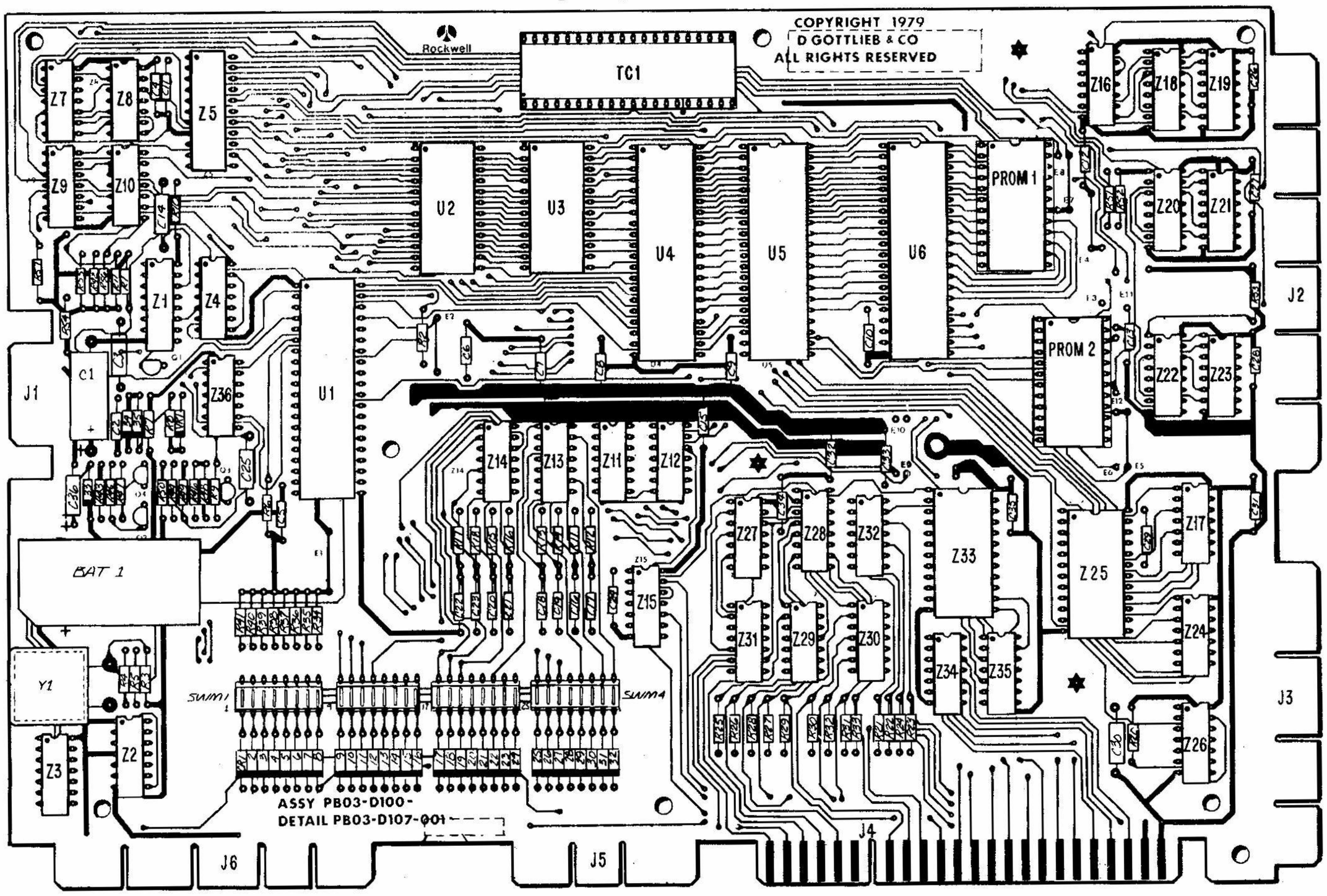

CONTROL BOARD (A1) PARTS LIST

REFERENCE	DESCRIPTION	PART NUMBER
BAT.1	Battery—3.6V	326R10-002
C1	Capacitor, 100 mfd., 10V	
C2, C4-C13, C15-C24, C26-C29, C31-C35	Capacitor, .01 mfd., 50V	
C3, C14, C25, C30	Capacitor, .1 mfd., 50V	
CR1-CR35	Diode, GP	1N4148
Q1, Q4	Transistor—PNP	MPS-A70
Q2, Q3	Transistor, NPN (Motorola)	2N440
R1, R6, R11-R24, R42, R45, R46, R48, R51-R57	Resistor, 3.0K ohm, 5%, 1/4W	
R2, R34-R41	Resistor, 4.7K ohm, 5%, 1/4W	
R3, R43, R49	Resistor, 5.6K ohm, 5%, 1/4W	
R4, R5, R44	Resistor, 2.0K ohm, 5%, 1/4W	
R7	Resistor, 62 ohm, 5%, 1/4W	
R8, R50	Resistor, 180 ohm, 5%, 1/4W	
R9	Resistor, 1K ohm, 5%, 1/4W	
R10	Resistor, 2.8M ohm, 5%, 1/4W	
R25-R33	Resistor, 620 ohm, 5%, 1/4W	
R47	Resistor, 24K ohm, 5%, 1/4W	
SW1-SW4	Dip Switch Pak—8 Position	341R31-005
TC1	Socket, 40 Pin	640379-3
U1	CPU	R6502-13
U2	ROM	R3273-12
U3	ROM	R3272-12
U4, U5, U6	RIOT	R6532-18
VR1	Zener Diode—3.0V, 5%	1N5225B or 1N5987B
Y1	Crystal, 3.579545 MHZ	333R08-001
Z1	IC-CMOS—Dual 1 Shot	SCL4528B
Z2	IC—Dual Flip Flop	SN7474N
Z3, Z11, Z12, Z16, Z17, Z24, Z26, Z27, Z34, Z35	IC—Hex Inverter	SN7404N
Z4	IC-CMOS—Quad 2 Input "AND"	SCL4081B
Z5	IC-RAN/CMOS	P5101-L
Z7	IC—Hex Inverter	SN74LS04N
Z8	IC—2 Input "NOR"	SX7402N
Z9, Z13, Z14	IC—2 Input "NAND"	SN7400N
Z10	IC—Open Collector Inverter	SN74LS05N
Z15	IC—2 Input—"OR"	SN7432N
Z18, Z20 Z22	IC—"D" Flip Flop	SN74175N
Z19, Z21, Z23	IC—4 to 7 Decoder	SN7448N
Z25, Z33	IC—4 to 16 Decoder	SN74154N
Z28	IC—2-to-4 Decoder	SN74LS139N
Z29, Z30	IC—Hex Inverter—OC/HV	SN7416N
Z31	IC—2 Input "AND"	SN7408N
Z32	IC—Hex Buffer—OC	SN7417N
Z36	IC—CMOS	MM74C04 or SCL4069B
	Socket—DIL, 24 PIN	640361-3
	Spacer, Cork	131R06-001

X. WIRING AND SCHEMATIC DIAGRAMS, PARTS LISTS

NOTE: UNLESS OTHERWISE INDICATED;
1. RESISTORS ARE ±5%, 1/4W.
2. CAPACITORS ARE .01UF, 50V.
3. DIODES ARE TYPE 1N4148.
4. REF. DESIGNATION Z6 NOT USED.

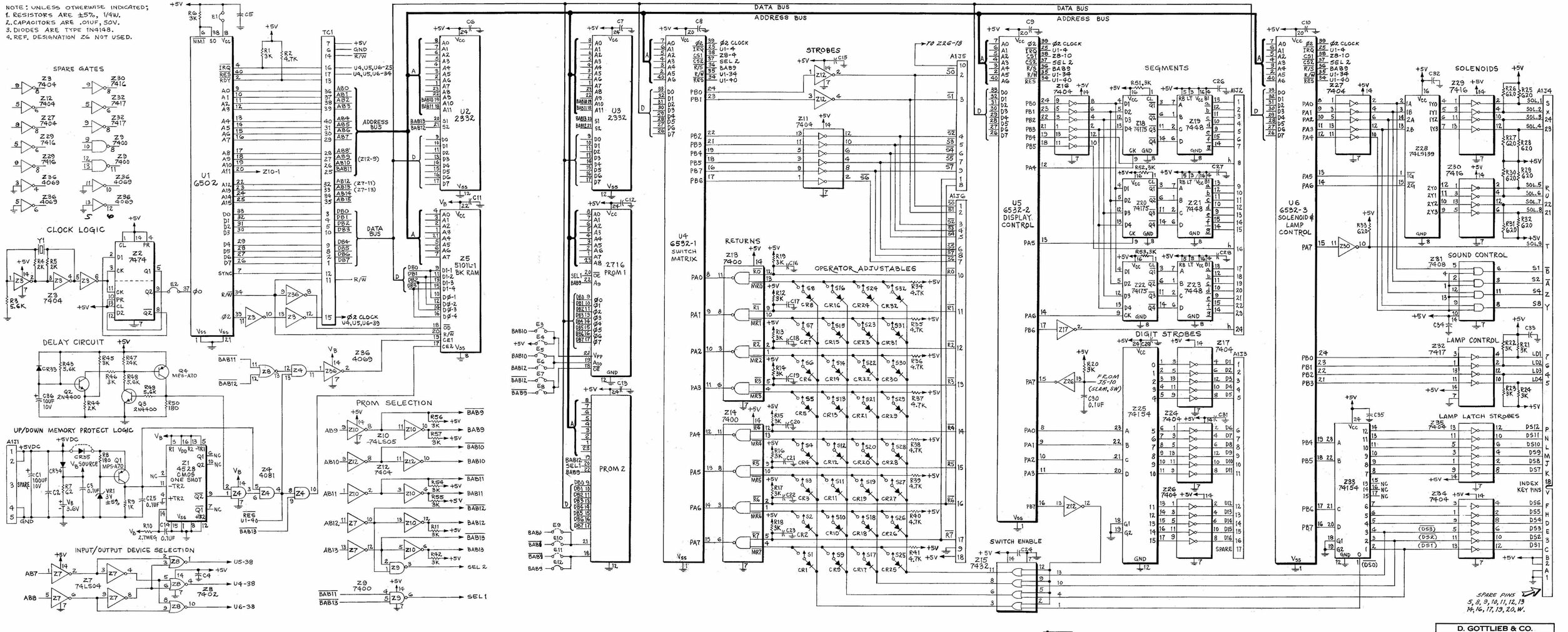

D. GOTTLIEB & CO.
TITLE CONTROL BOARD (A1)
USED ON SYSTEM 80
DRAWN 6-23-80 | APPROVED BAM | DATE 12-20-80 | E-20916

DRIVER BOARD (A3) COMPONENT LOCATION

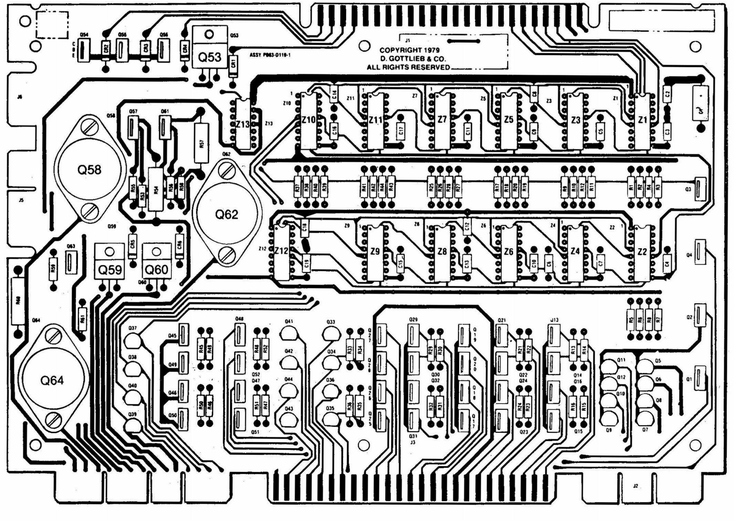

DRIVER BOARD (A3) PARTS LIST

REFERENCE	DESCRIPTION	PART NUMBER
C1	Capacitor, 10 mfd., 10V Tantalum	
C2-C19	Capacitor, .01 mfd., 50V	
CR1-CR6	Diode—Silicon	1N4148
R1-R53, R61, R55, R56, R58, R59	Resistor, 1000 ohm, 5%, 1/4W	
R54, R57, R60	Resistor, 9.1 ohm, 5%, 1W	
Q1-Q4, Q13-Q32, Q45-Q52, Q54-Q57, Q63	Transistor, NPN, Darlington	MPS-U45
Q5-Q12, Q33-Q44	Transistor, NPN, Darlington	MPS-A13
Q53, Q59, Q60	Transistor, NPN, Darlington	2N6043
Q58, Q62, Q64	Transistor, NPN	2N3055
Z1-Z12	I.C. Quad "D" Latch Flip Flop	SN74175N
Z13	I.C. Hex Inverter	SN7404N
	Insulator—Thermalloy	43-03-4

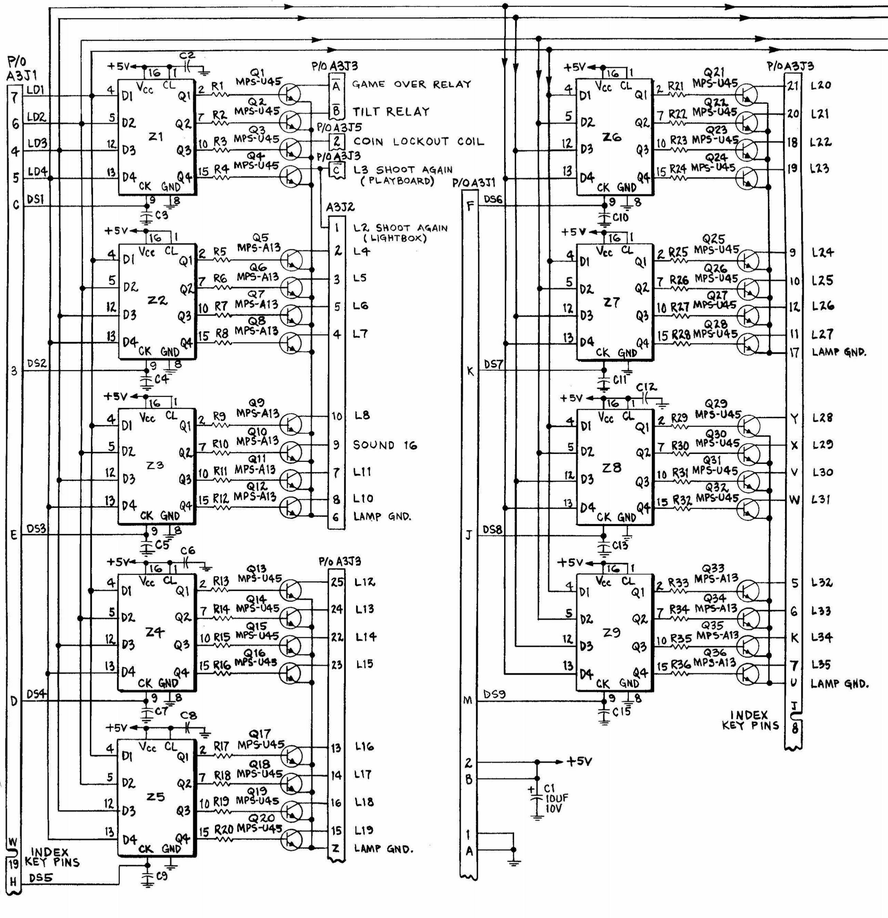

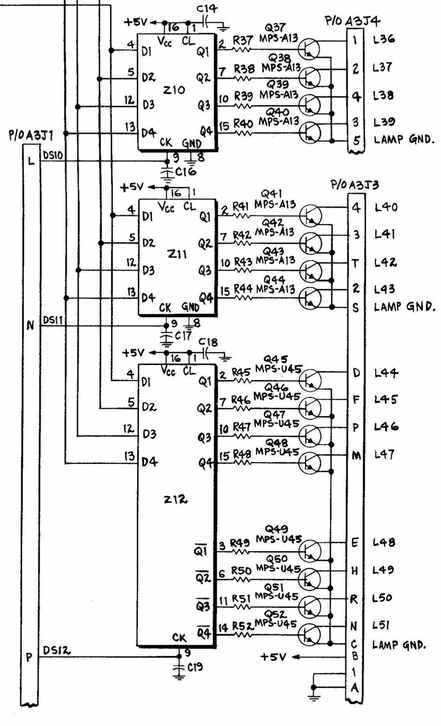

NOTE: UNLESS OTHERWISE SPECIFIED;
1. RESISTORS ARE 1.0K, ±5%, 1/4W.
2. CAPACITORS ARE .01UF, 20%, 50V.
3. DIODES ARE TYPE 1N4148.
4. INTEGRATED CIRCUITS ARE SN74175N.
5. TRANSISTOR TYPES MPS-A13 AND MPS-U45 ARE NPN DARLINGTONS.

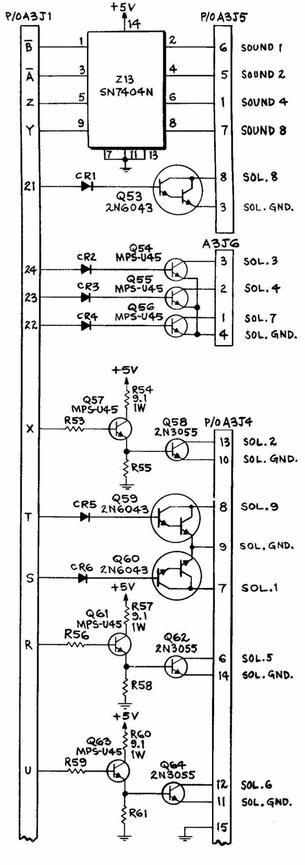

D. GOTTLIEB & CO.			
TITLE	DRIVER BOARD (A3)		
USED ON	SYSTEM 80		
DRAWN	APPROVED	DATE	E-20915
	BAP	12-12-80	

SOUND/SPEECH BOARD (A6) COMPONENT LOCATION

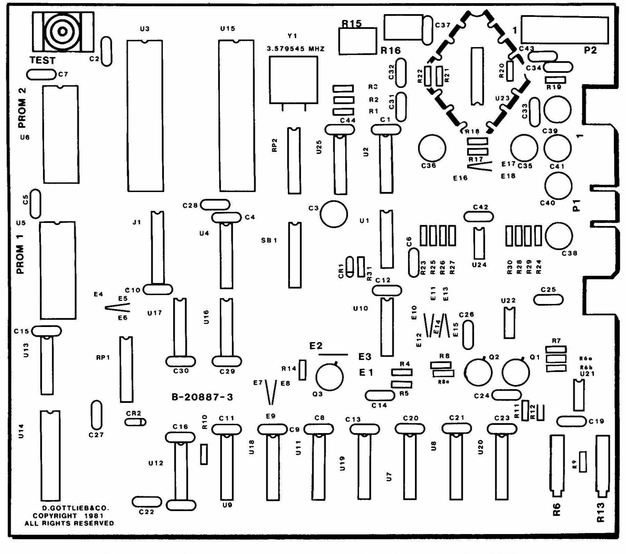

SOUND/SPEECH BOARD (A6) PARTS LIST

REFERENCE	DESCRIPTION	PART NUMBER
C1, C2	Capacitor, .1 UF 25V, CMD	
C4-C13, C15, C16, C19, C20, C21, C23, C25, C26, C29, C30		
C28		
C31-C32 C42, C44	Capacitor, 0.05 MF, 25V, CMD	
C37	Capacitor, 4.7 MF, 25V Tantalum	
C3, C38-C41	Capacitor, 47 MF, 50V	
C14, C24	Capacitor, 100 PF, 250V, 20%	
C22	Capacitor, 300 PF, CMD	
C27	Capacitor, 1 UF, 50V, TNT	
C36	Capacitor, 470 MF, 35V	
CR1	Diode	1N4148
CR2	Diode, Zener	1N5225B
Q1, Q3	Transistor, NPN	2N2222A
Q2	Transistor, PNP	2N2907A
R1, R4, R5, R11; R12	Resistor, 5.6K ohm, 1/4W	
R2, R3	Resistor, 2K ohm, 1/4W, 5%	
R6, R13	Potentiometer, 10K, Bourns	3006-103
R7	Resistor, 10K ohm, 1/4W, 5%	
R8, R8A, R14	Resistor, 1K ohm, 1/4W, 5%	
R6A, R6B	Resistor, 1.8K ohm, 5%, 1/4 watt	
R9	2.2K ohm, 5%, 1/4W	
R10	Resistor, 1.5K ohm, 1/4W, 5%	
R15, R16	Potentiometer, 10K, CTS	X201R

REFERENCE	DESCRIPTION	PART NUMBER
R18, R21	Resistor, 100K ohm, 1/4W	
R22	Resistor, 2K ohm, 1/4W, 5%	
R23-R30	Resistor, 10K ohm, 1/4W	
R31	Resistor, 3.3K ohm, 1/4W, 5%	
RP1, RP2	Resistor, Dip	4116R-002-222
SB1	Dip Switch	1008-692
SW1	Moment Pushbutton Switch	
U1	IC, Trigger	7414
U2	IC	SN74LS74N
U3	CPU	R6502-13
U4	IC	SN74LS138N
U5, U6	E Prom	2716
U7-U9, U11, U18	IC	SN74LS75
U10	IC	SN74LS02N
U12	IC	SN7407N
U13	IC, Inverter	SN74LS05N
U14 not used	Voice Chip	SC01
U15	RRIOT	R6532-18
U16	IC	SN74LS04N
U17	IC	SN74LS30N
U19, U20	Converter, PMI	1408A-6P
U21, U22	IC	LM741CP
U23	IC	LM379S
U24	IC, Dual Comparitor	LM193
U25	Inverter	7404
Y1	Crystal, 3.579545 MHZ	
	Socket 22 Pin Dip	
	Socket 24 Pin (2)	640361-3
	Socket 40 Pin (2)	640379-3

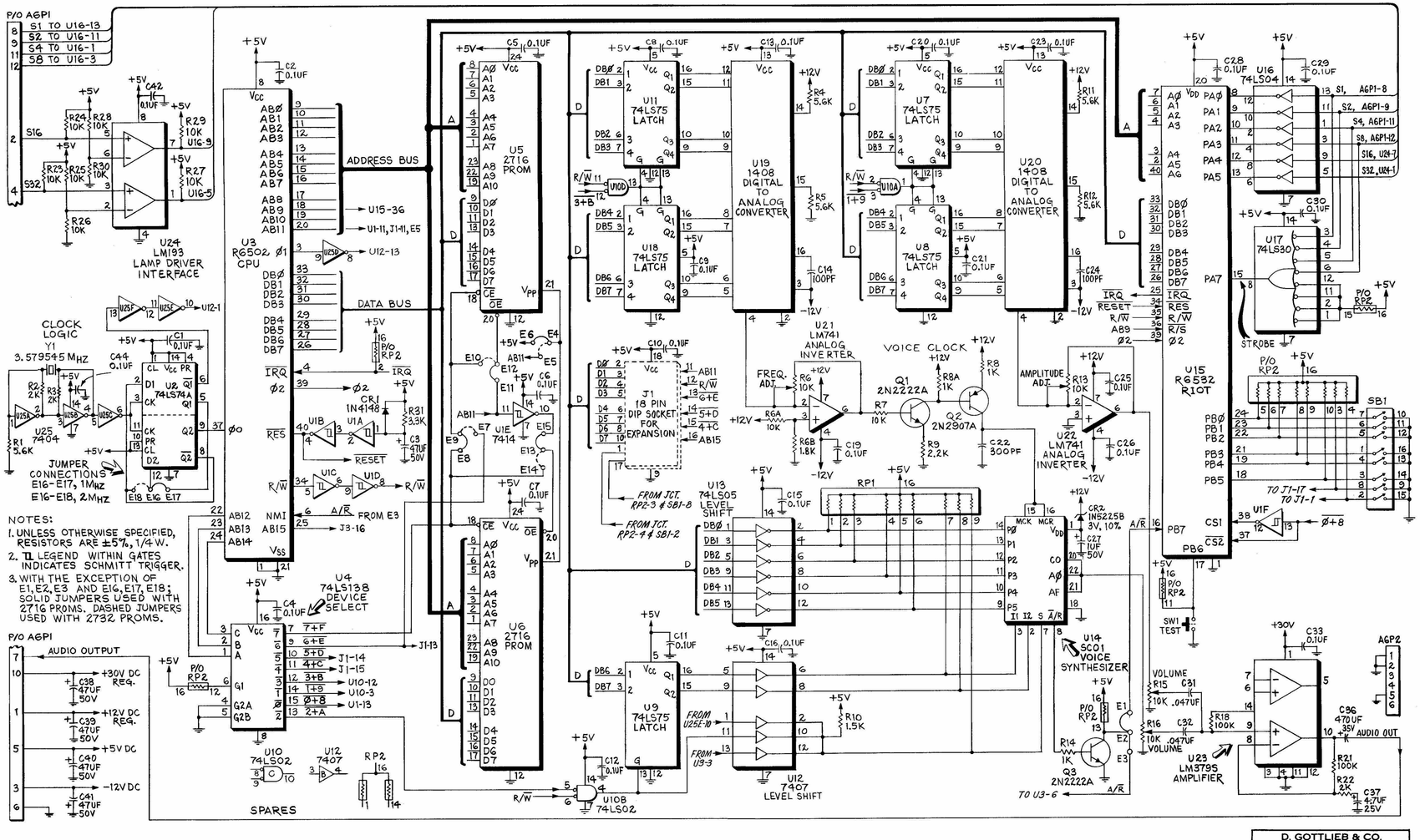

D. GOTTLIEB & CO.
TITLE SOUND/SPEECH BOARD A6
USED ON SYSTEM 80
DRAWN BY / APPROVED 4-25-81 E-21337

X. WIRING AND SCHEMATIC DIAGRAMS, PARTS LISTS

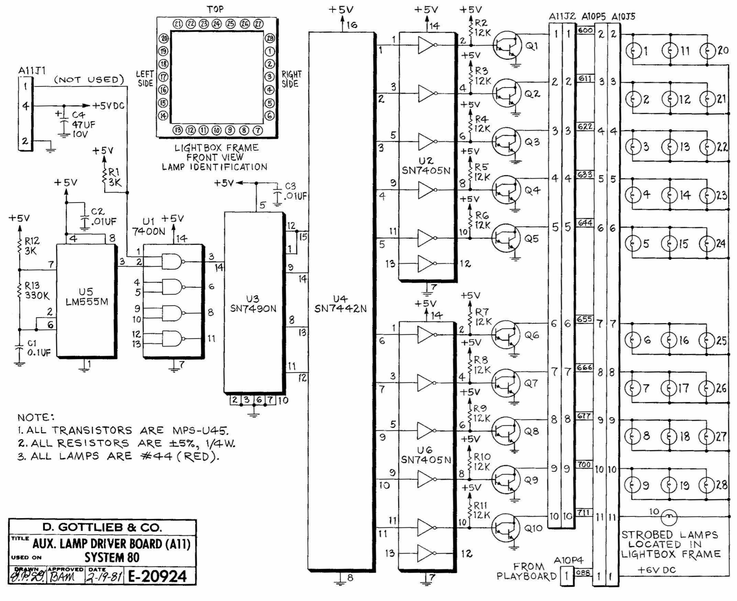

NOTE:
1. ALL TRANSISTORS ARE MPS-U45.
2. ALL RESISTORS ARE ±5%, 1/4W.
3. ALL LAMPS ARE #44 (RED).

D. GOTTLIEB & CO.			
TITLE AUX. LAMP DRIVER BOARD (A11)			
USED ON SYSTEM 80			
DRAWN	APPROVED	DATE	
8-18-80	BAM	2-19-81	E-20924

AUXILIARY LAMP DRIVER BOARD (A11) COMPONENT LOCATION

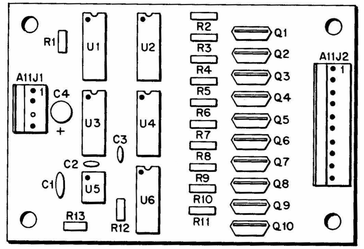

AUXILIARY LAMP DRIVER BOARD (A11) PARTS LIST

REFERENCE	DESCRIPTION	PART NUMBER
C1	CAPACITOR, .1 MFD, 100V CERAMIC RADIAL LEAD	
C2-C3	CAPACITOR, .01 MFD, 100V RADIAL LEAD	
C4	CAPACITOR, 47 MFD, 10V ELECTROLYTIC RADIAL LEAD	
Q1-Q10	TRANSISTOR, NPN DARLINGTON	MPS-U45
R1, R12	RESISTOR, 3K OHM, 5%, 1/4 W	
R2-R11	RESISTOR, 12K OHM, 5%, 1/4 W	
R13	RESISTOR, 330K OHM, 5%, 1/4 W	
U1	I.C. 2-INPUT NAND	SN7400N
U2, U6	I.C. INVERTER	SN7405N
U3	I.C. DECADE COUNTER	SN7490N
U4	I.C. DECODER	SN7442N
U5	I.C. TIMER	LM555N

10 POS. SQUARE WIRE FRICTION LOCK CONNECTOR
4 POS. SQUARE WIRE FRICTION LOCK CONNECTOR

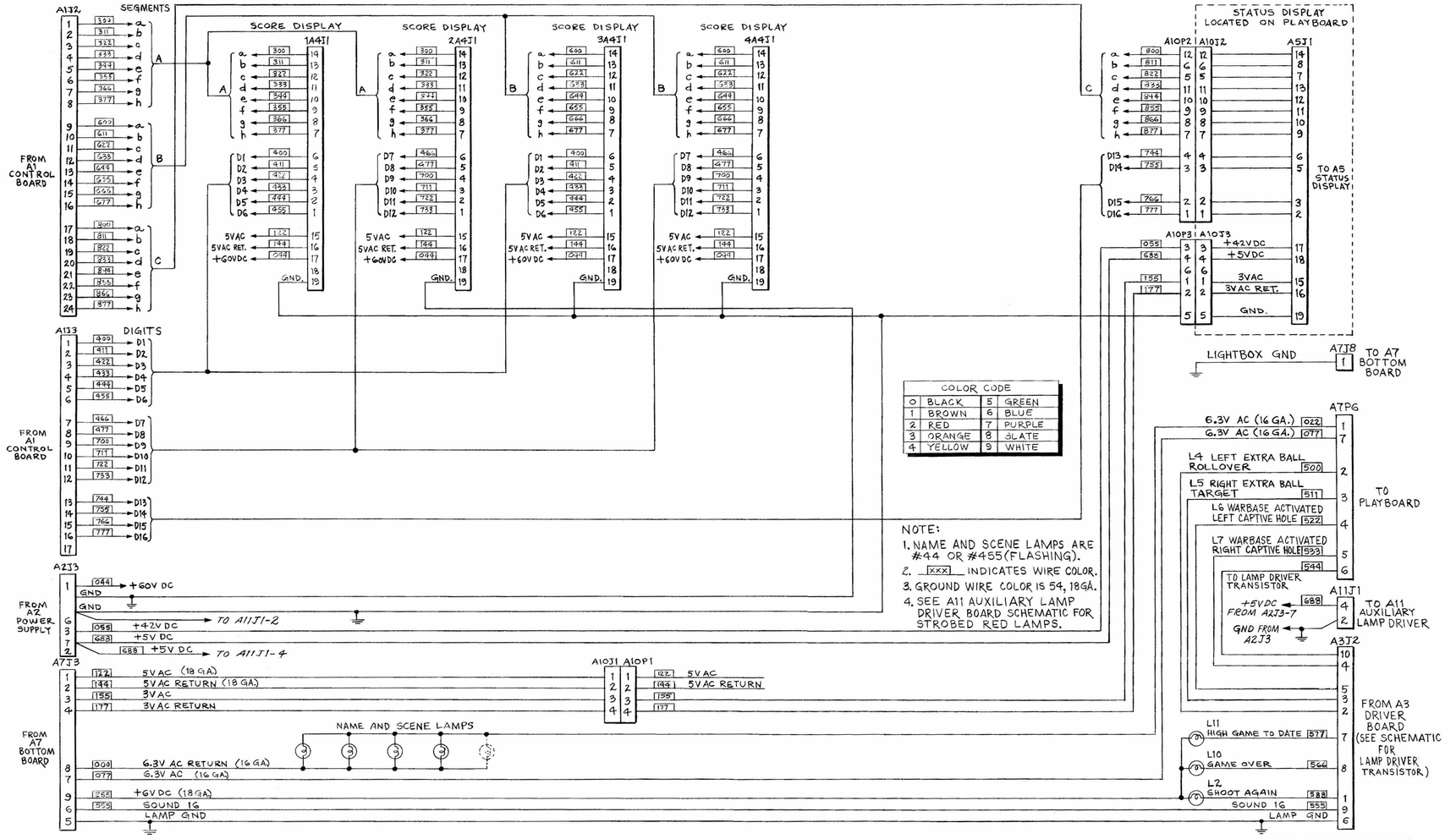

COLOR CODE			
0	BLACK	5	GREEN
1	BROWN	6	BLUE
2	RED	7	PURPLE
3	ORANGE	8	SLATE
4	YELLOW	9	WHITE

NOTE:
1. NAME AND SCENE LAMPS ARE #44 OR #455 (FLASHING).
2. [XXX] INDICATES WIRE COLOR.
3. GROUND WIRE COLOR IS 54, 18GA.
4. SEE A11 AUXILIARY LAMP DRIVER BOARD SCHEMATIC FOR STROBED RED LAMPS.

D. GOTTLIEB & CO.			
TITLE LIGHTBOX WIRING			
USED ON SYSTEM 80, GAME #666			
DRAWN	APPROVED	DATE	
12-8-80	BAM	1-29-81	E-2091

X. WIRING AND SCHEMATIC DIAGRAMS, PARTS LIST

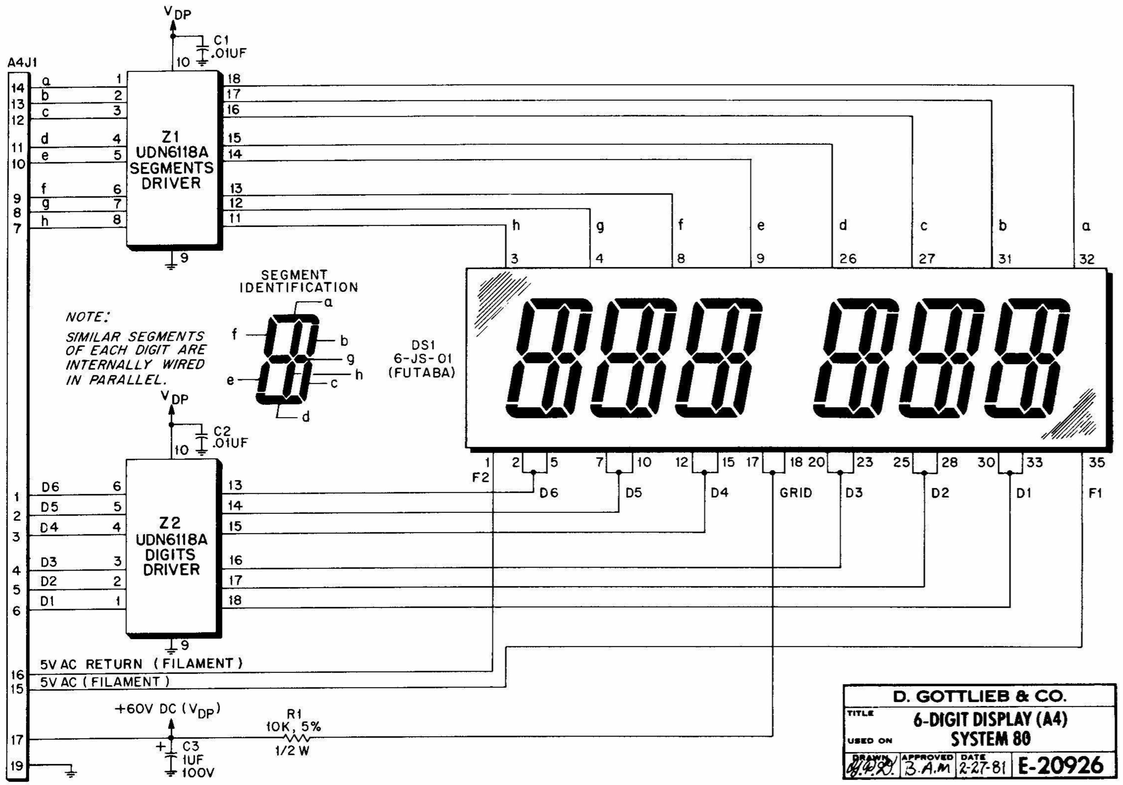

6-DIGIT DISPLAY (A4) COMPONENT LOCATION

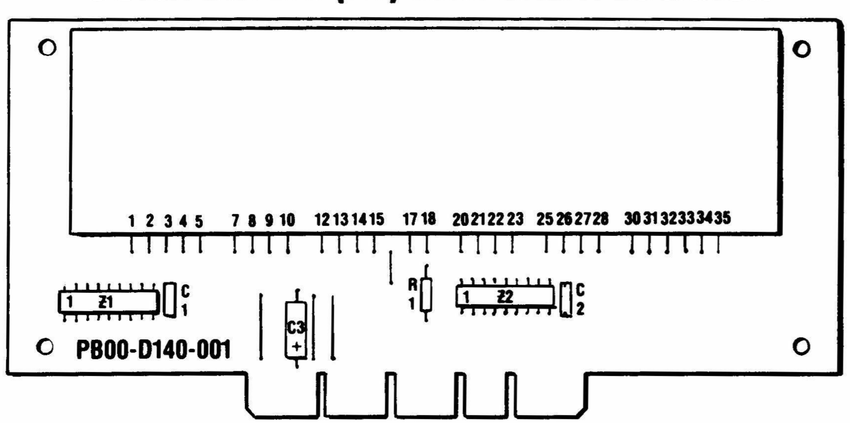

6-DIGIT DISPLAY (A4) PARTS LIST

REFERENCE	DESCRIPTION	PART NUMBER
C1, C2	Capacitor, .01 mfd., 100V Kemet	C320C103MIR5CA
C3	Capacitor, 1 mfd., 100V Sprague	TE1400
DS1	6-Digit Display Tube—FUTABA	6-JS-01
R1	Resistor, 10K ohm, 5%, 1/2W	RC20GF103
Z1, Z2	IC—Fluorescent Display Driver—Sprague	UDN6118A

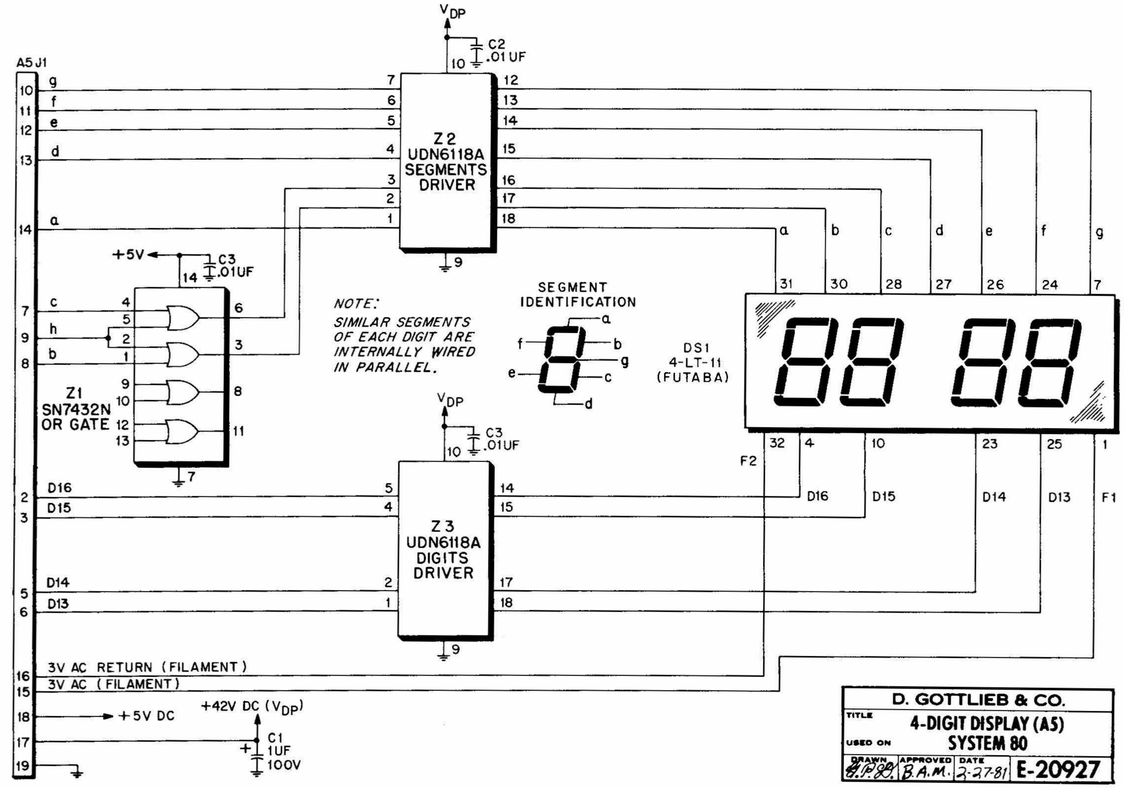

4-DIGIT DISPLAY (A5) COMPONENT LOCATION

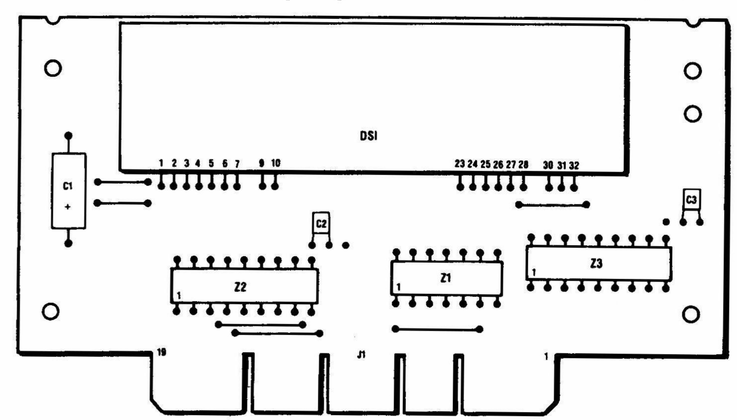

4-DIGIT DISPLAY (A5) PARTS LIST

REFERENCE	DESCRIPTION	PART NUMBER
C1	Capacitor, 1 mfd., 100V Sprague	TE1400
C2, C3	Capacitor, .01 mfd., 100V Kemet	C320C103MIR5CA
DS1	4-Digit Display Tube—FUTABA	4-LT-11
Z1	IC—Quad or Gate—T.I.	SN7432N
Z2, Z3	IC—Fluorescent Display Driver—Sprague	UDN6118A

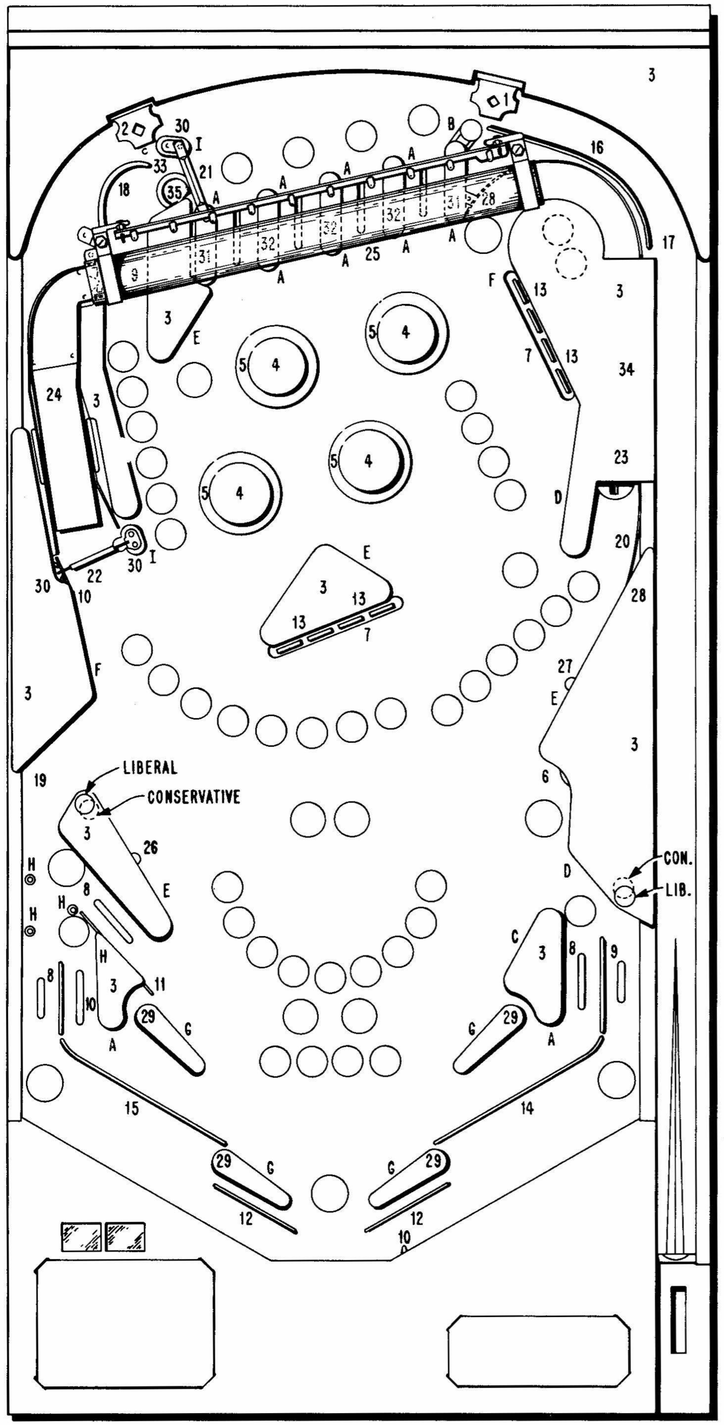

PLAYBOARD INFORMATION

RUBBER RINGS

A	A-10217	5/16"	(10)
B	A-10218	3/4"	(1)
C	A-10220	1-1/2"	(1)
D	A-10221	2"	(2)
E	A-10222	2-1/2"	(5)
F	A-10223	3"	(2)
G	A-13151		(4)
H	A-15705		(4)
I	A-17493		(2)

PARTS LIST

1. A-19645 Ball Gate Right.
2. A-19646 Ball Gate Left.
3. D-20632 Plastic Shield Set.
4. Red Pop Bumper D-10435 and A-20820 Cap in Black (4).
5. Red Pop Bumper Skirt (4).
6. A-9374 Yellow Plastic Target.
7. A-20818 Red Drop Target in black (8).
8. A-3722 Ball Guide Rail (3).
9. A-4832 Ball Guide Rail (2).
10. A-6934 Ball Guide Rail (3).
11. A-13782 Ball Guide Rail.
12. A-13798 Ball Snubber Rail (2).
13. A-18070 Ball Guide Rail (4).
14. A-19995 Ball Guide Rail.
15. A-19996 Ball Guide Rail.
16. B-20640 Ball Guide Rail.
17. B-20641 Ball Guide Rail.
18. B-20787 Ball Guide Rail.
19. A-8688 Metal Flat Rail.
20. D-20642 Metal Flat Rail.
21. A-17300 Roll Under Gate.
22. A-20388 Spinning Target.
23. A-16038 Ball Snubber.
24. C-20859 Ramp & Platform Assembly.
25. D-20894 Tube Assembly.
26. A-15636 Left Kicking Rubber.
27. A-15638 Right Kicking Rubber.
28. A-20362 Flat Rail Clip (use with D-20642) (2).
29. C-13150 White Jumbo Flipper (4).
30. C-17492 White Siamese Post (3).
31. A-9395 Red Plastic Guide Rail (2).
32. A-9396 Red Plastic Guide Rail (3).
33. A-20645 Plastic Tubing.
34. A-15838 Ball Contact Kicker.
35. A-20950 Ball Snubber.

C-11561 Clear 1" High Post (39).

CON.=CONSERVATIVE.
LIB. =LIBERAL.

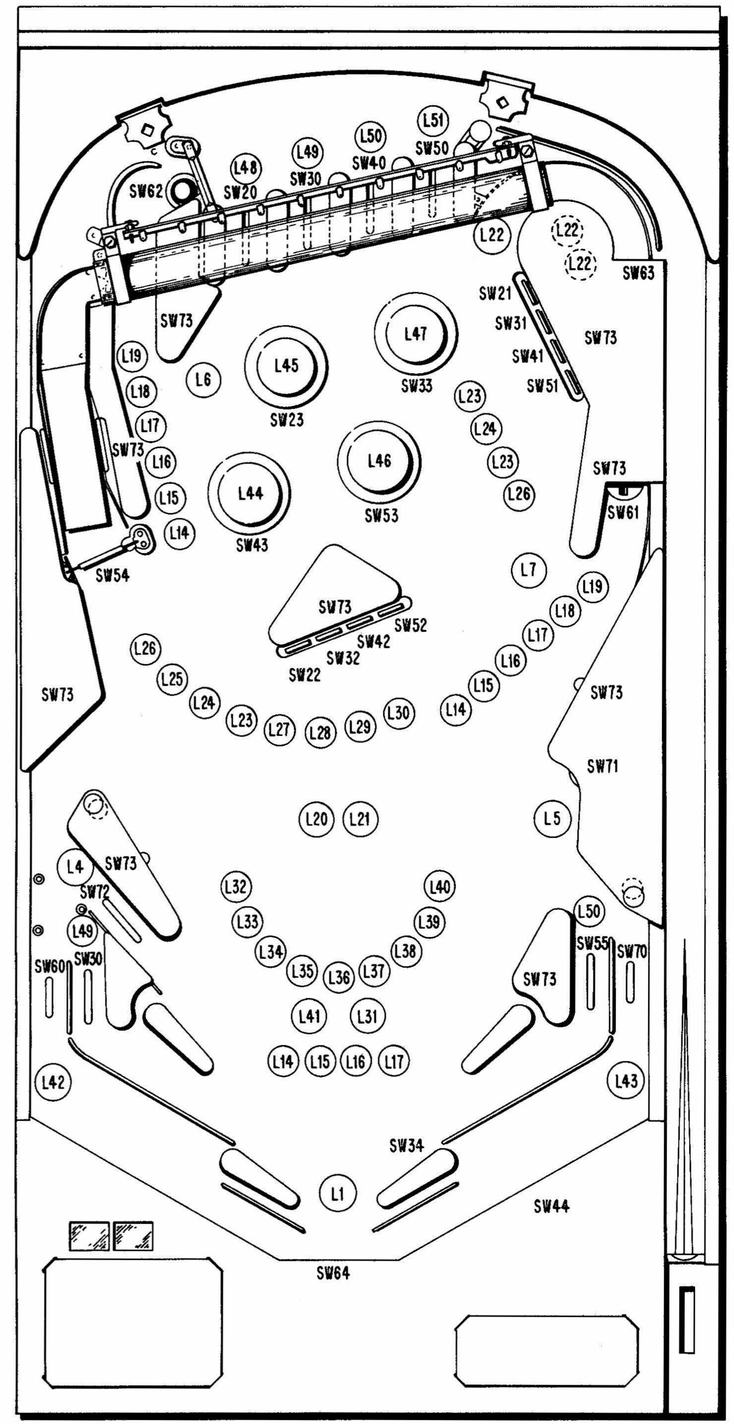

PLAYBOARD SWITCH AND LAMP ASSIGNMENTS

SWITCH MATRIX NUMBER	SWITCH ASSIGNMENT
20	"M" Rollover
21	#1 Right Drop Target
22	#1 Center Drop Target
23	Left Top Pop Bumper
30	"A" Rollovers (2)
31	#2 Right Drop Target
32	#2 Center Drop Target
33	Right Top Pop Bumper
34	Right Flipper
40	"R" Rollover (Top)
41	#3 Right Drop Target
42	#3 Center Drop Target
43	Left Bottom Pop Bumper
44	Trough
50	"S" Rollover
51	#4 Right Drop Target
52	#4 Center Drop Target
53	Right Bottom Pop Bumper
54	Spin Target
55	"R" Rollover (Bottom)
57	Tilt
60	left Outlane Rollover
61	Right Warbase Hole
62	Left Warbase Hole
63	Right Launch Lane
64	Outhole
70	Right Outlane Rollover
71	Right Extra Ball Target
72	Extra Ball Rollover
73	10-Point Switches (131)

LAMP NUMBER	LAMP ASSIGNMENT
L1	Shoot Again
L4	Left Extra Ball Rollover
L5	Right Extra Ball Target
L6	Left Captive (Hole) Activate Warbase
L7	Right Captive (Hole) Activate Warebase
L14	2X (3) Multipliers
L15	3X (3) Multipliers
L16	4X (3) Multipliers
L17	5X (3) Multipliers
L18	Left and Right Extra Ball (Hole)
L19	Left and Right Special (Hole)
L20	3X Scoring
L21	5X Scoring
L22	Launch (Right Shooter) (3)
L23	#1 Right Drop Target and #1 Spin Target
L24	#2 Right Drop Target and #2 Spin Target
L25	#3 Right Drop Target and #3 Spin Target
L26	#4 Right Drop Target and #4 Spin Target
L27	#1 Center Drop Target
L28	#2 Center Drop Target
L29	#3 Center Drop Target
L30	#4 Center Drop Target
L31	20,000 Bonus
L32	1,000 Bonus
L33	2,000 Bonus
L34	3,000 Bonus
L35	4,000 Bonus
L36	5,000 Bonus
L37	6,000 Bonus
L38	7,000 Bonus
L39	8,000 Bonus
L40	9,000 Bonus
L41	10,000 Bonus
L42	Left Special Rollover
L43	Right Special Rollover
L44	Left Bottom Pop Bumper
L45	Left Top Pop Bumper
L46	Right Bottom Pop Bumper
L47	Right Top Pop Bumper
L48	"M" Rollover
L49	"A" Rollover and Left Return Rollover
L50	"R" Rollover and Right Return Rollover
L51	"S" Rollover

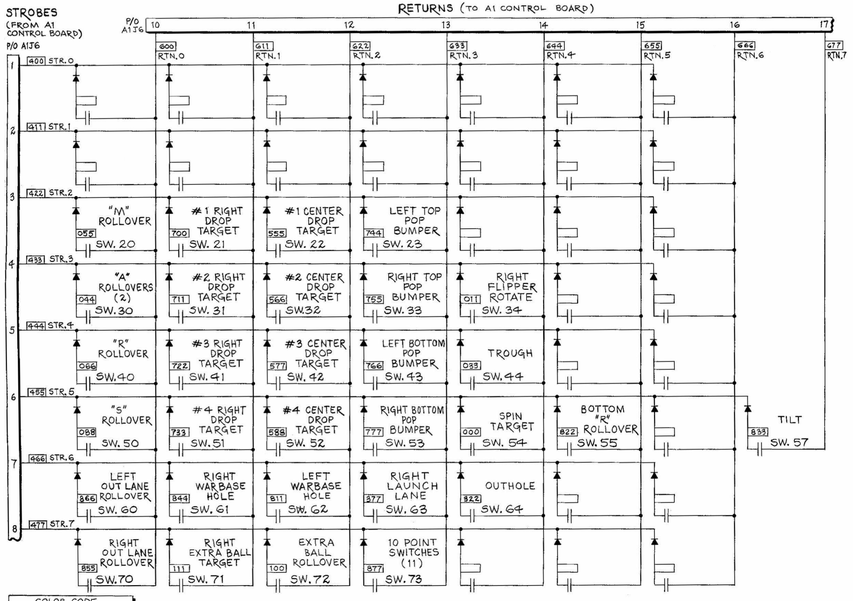

COLOR CODE			
0	BLACK	5	GREEN
1	BROWN	6	BLUE
2	RED	7	PURPLE
3	ORANGE	8	SLATE
4	YELLOW	9	WHITE

NOTE:
1. ALL DIODES ARE 1N270.
2. STROBE 0, STROBE 1 AND RETURN 6 NOT USED.

D. GOTTLIEB & CO.			
TITLE	SWITCH MATRIX		
USED ON	SYSTEM 80, GAME #666		
DRAWN	APPROVED	DATE	
		1-14-81	E-20920

X. WIRING AND SCHEMATIC DIAGRAMS, PARTS LISTS

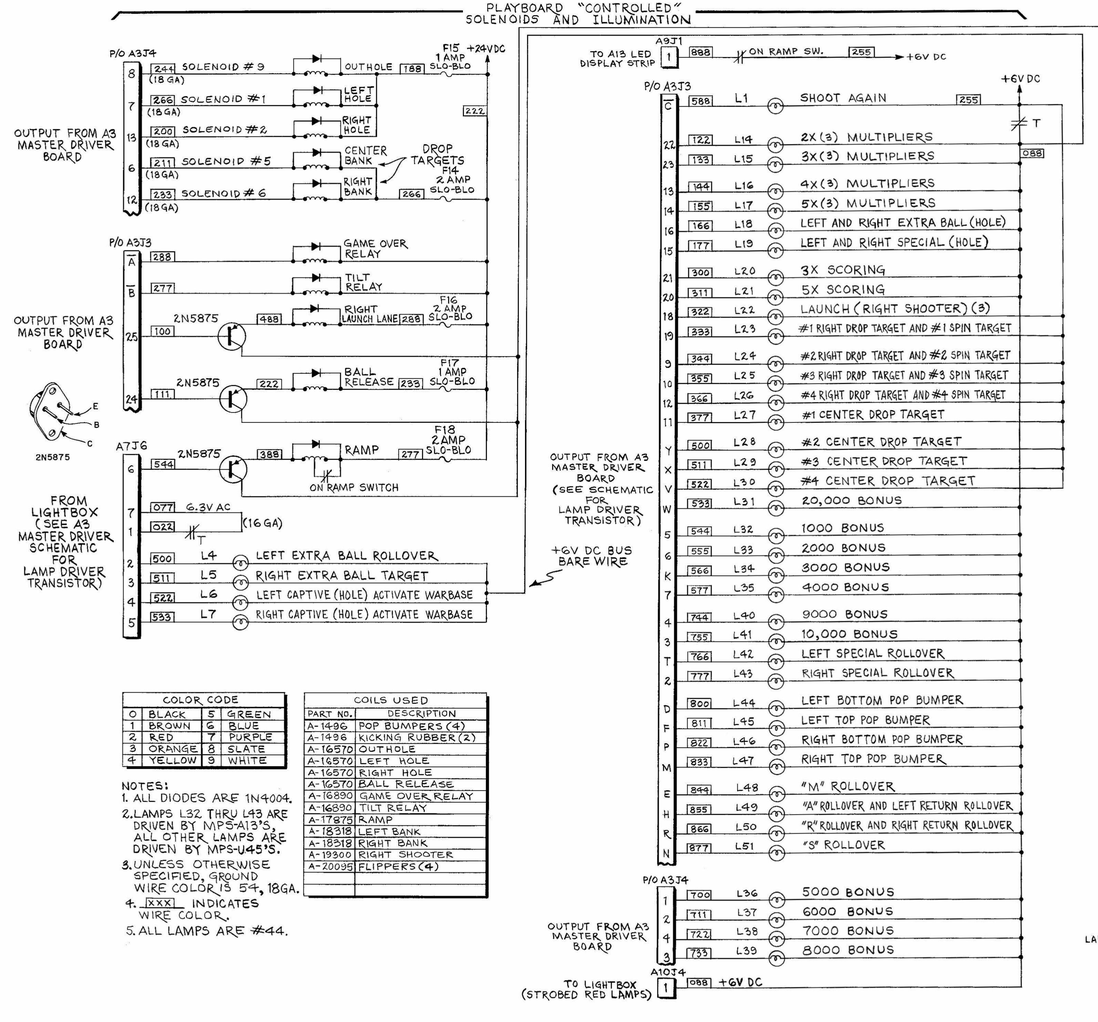

COLOR CODE			
0	BLACK	5	GREEN
1	BROWN	6	BLUE
2	RED	7	PURPLE
3	ORANGE	8	SLATE
4	YELLOW	9	WHITE

COILS USED	
PART NO.	DESCRIPTION
A-14986	POP BUMPERS (4)
A-1496	KICKING RUBBER (2)
A-16570	OUTHOLE
A-16570	LEFT HOLE
A-16570	RIGHT HOLE
A-16570	BALL RELEASE
A-16890	GAME OVER RELAY
A-16880	TILT RELAY
A-17876	RAMP
A-18318	LEFT BANK
A-18318	RIGHT BANK
A-19300	RIGHT SHOOTER
A-20095	FLIPPERS (4)

NOTES:
1. ALL DIODES ARE 1N4004.
2. LAMPS L32 THRU L43 ARE DRIVEN BY MPS-A13'S, ALL OTHER LAMPS ARE DRIVEN BY MPS-U45'S.
3. UNLESS OTHERWISE SPECIFIED, GROUND WIRE COLOR IS 54, 18GA.
4. XXX INDICATES WIRE COLOR.
5. ALL LAMPS ARE #44.

D. GOTTLIEB & CO.			
TITLE	PLAYBOARD		
USED ON	SOLENOIDS AND ILLUMINATIO		
	SYSTEM 80, GAME #666		
DRAWN	APPROVED	DATE	
		1-13-81	E-209

SUBJECT: OEM POP BUMPER DRIVER BOARD
FILE: BHPOPBU2.DOC
11/26/94 02:48 PM

All OEM Pop Bumper Driver boards need to be examined to see if a factory rework/upgrade has been made to them. The rework corrects a design error and increases reliability of operation. The diagrams below show the schematic changes and the component locations.

To quickly identify this rework look for: 2 diodes = NOT reworked, or, 1 diode and 1 jumper wire = reworked.

ORIGINAL DESIGN / UNMODIFIED

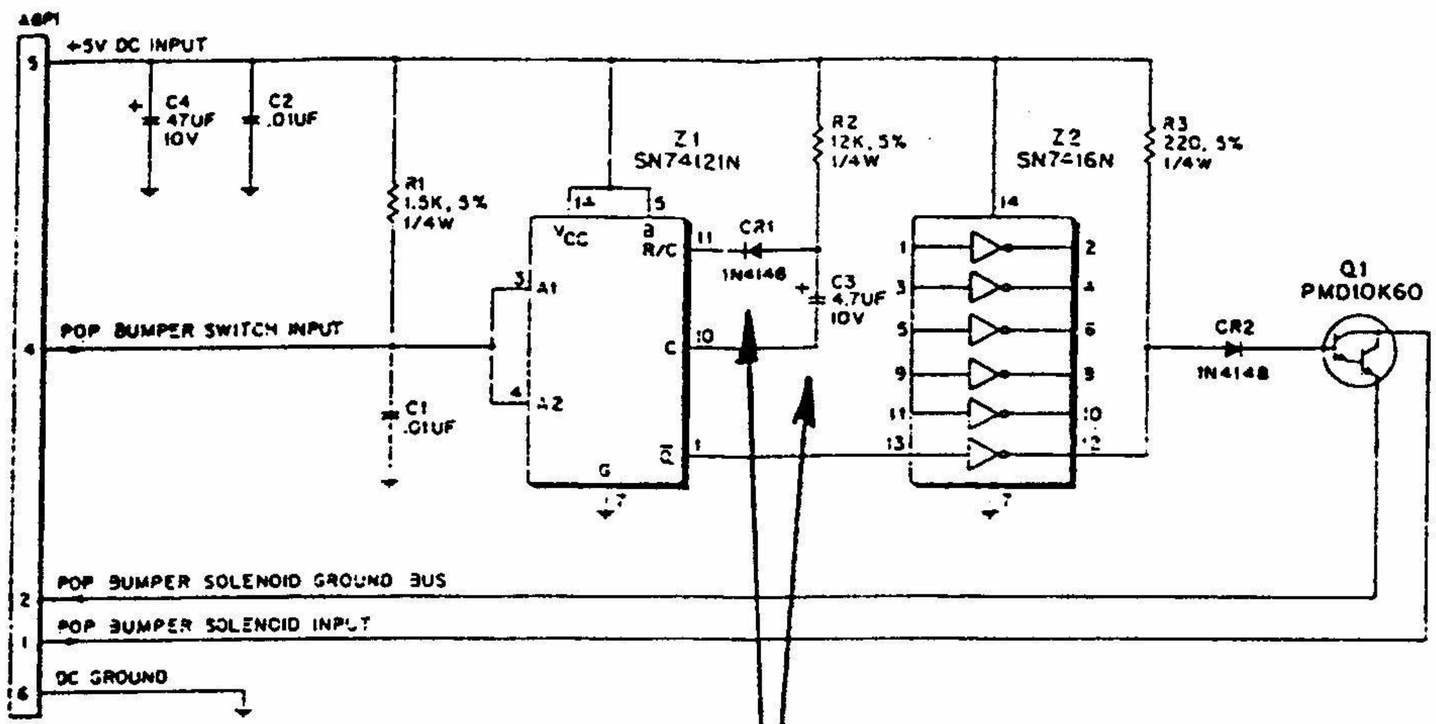

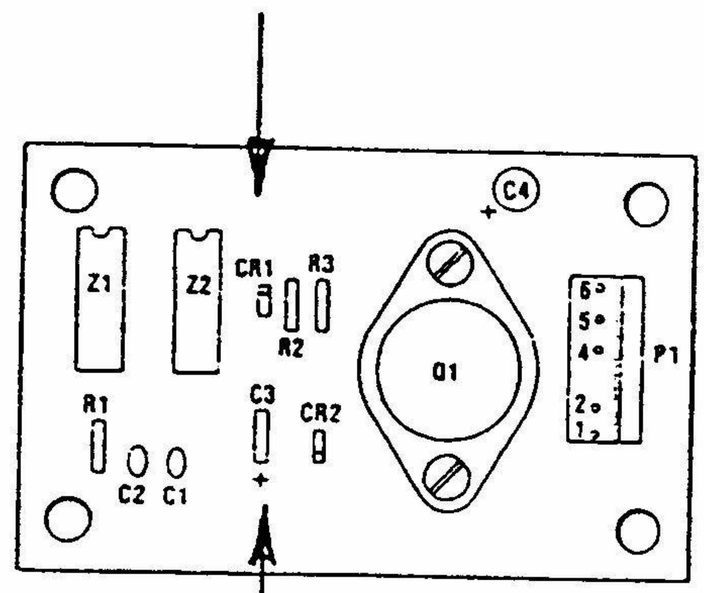

NOTE CHANGES!

NOTE!

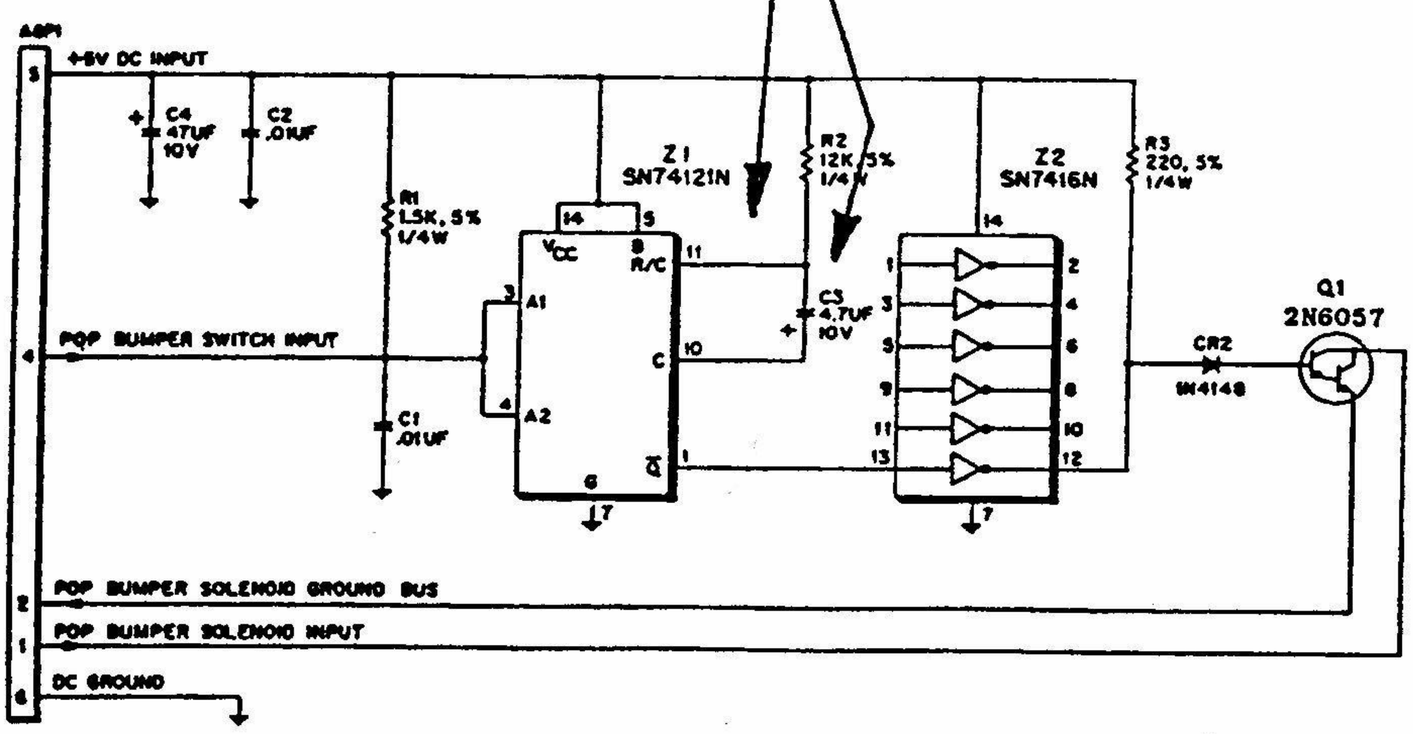

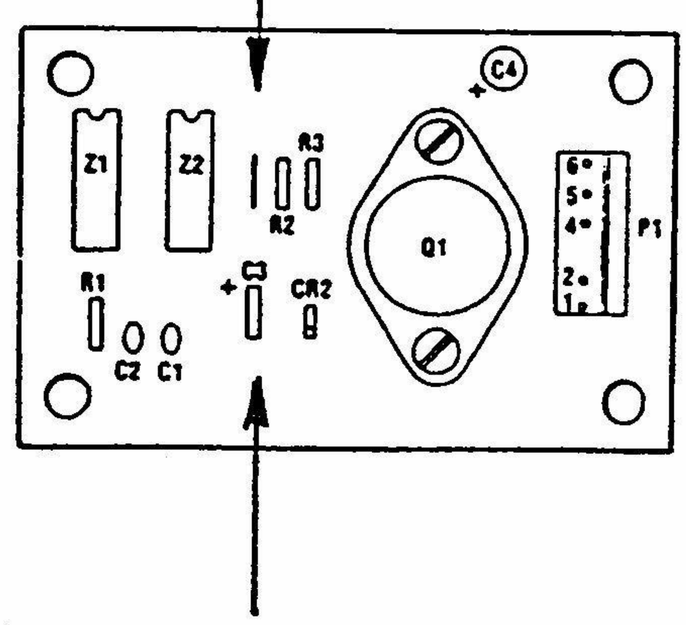

FINAL DESIGN / MODIFIED

NOTE! THE CAPACITOR MUST BE REPLACED NOT SIMPLY REVERSED AND RE-USED!

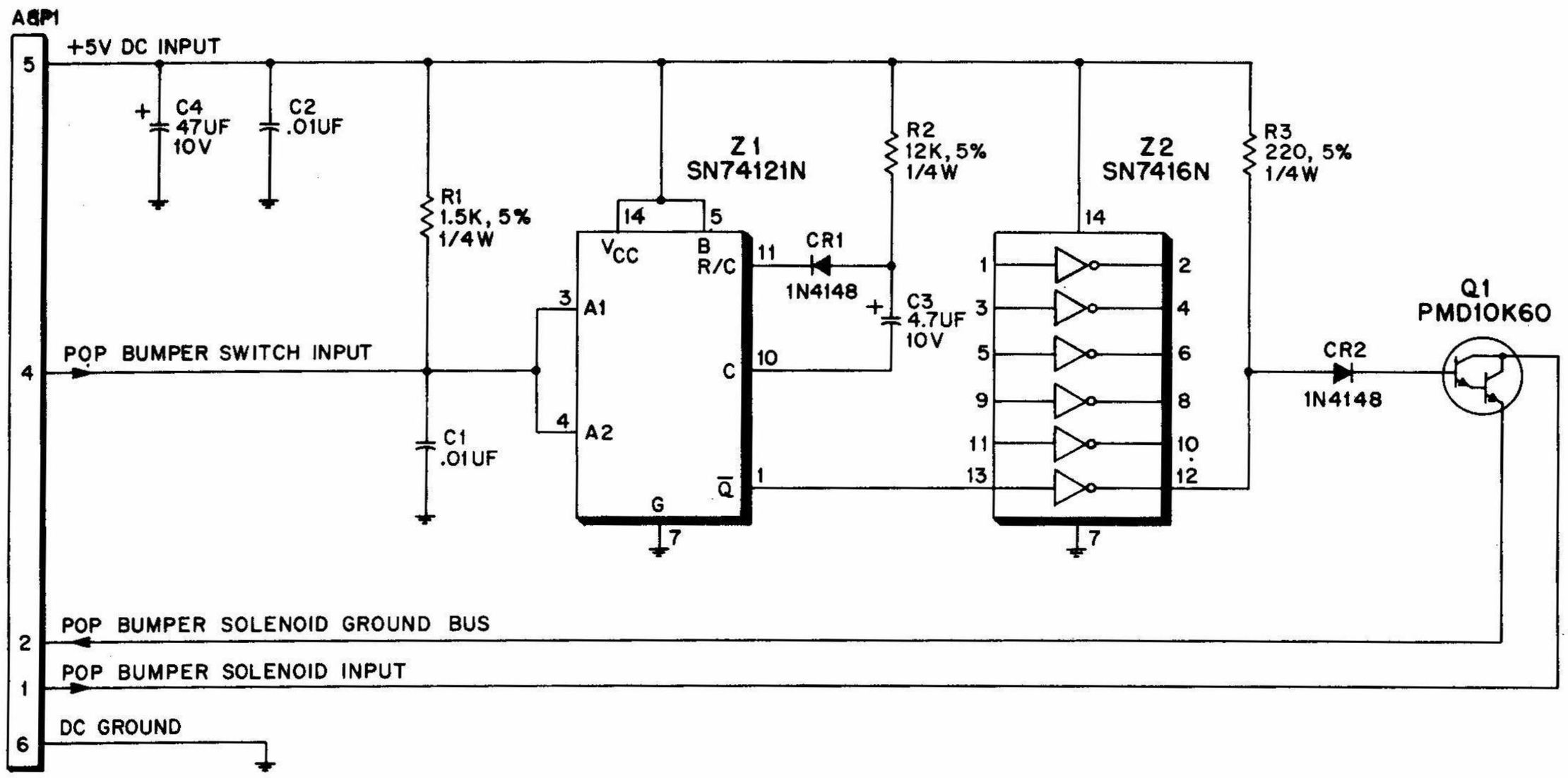

D. GOTTLIEB & CO.			
TITLE POP BUMPER DRIVER BOARD (A8)			
USED ON SYSTEM 80			
DRAWN	APPROVED BAM	DATE 2-9-81	D-20923

POP BUMPER DRIVER BOARD (A8) COMPONENT LOCATION

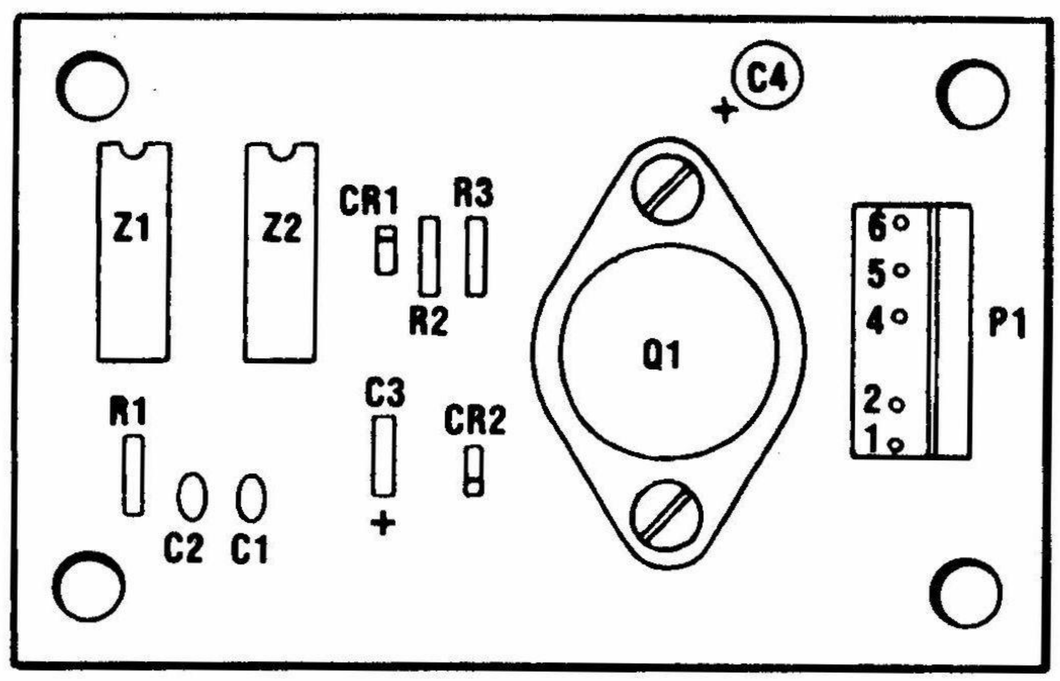

POP BUMPER DRIVER BOARD (A8) PARTS LIST

REFERENCE	DESCRIPTION	PART NUMBER
C1, C2	Capacitor, .01 mfd., 20%, 100V	
C3	Capacitor, 4.7 mfd., 10%, 10V	
C4	Capacitor, 47 mfd., 10V	
CR1, CR2	Diode	1N4148
P1	Connector	09-65-1061
R1	Resistor, 1.5K ohm, 5%, 1/4W	
R2	Resistor, 12K ohm, 5%, 1/4W	
R3	Resistor, 220 ohm, 1/4W, 5%	
Q1	Transistor—LAMBDA	PMD10K60
Z1	IC	SN74121N
Z2	IC	SN7416N

X. WIRING AND SCHEMATIC DIAGRAMS, PARTS LISTS CORRECTED

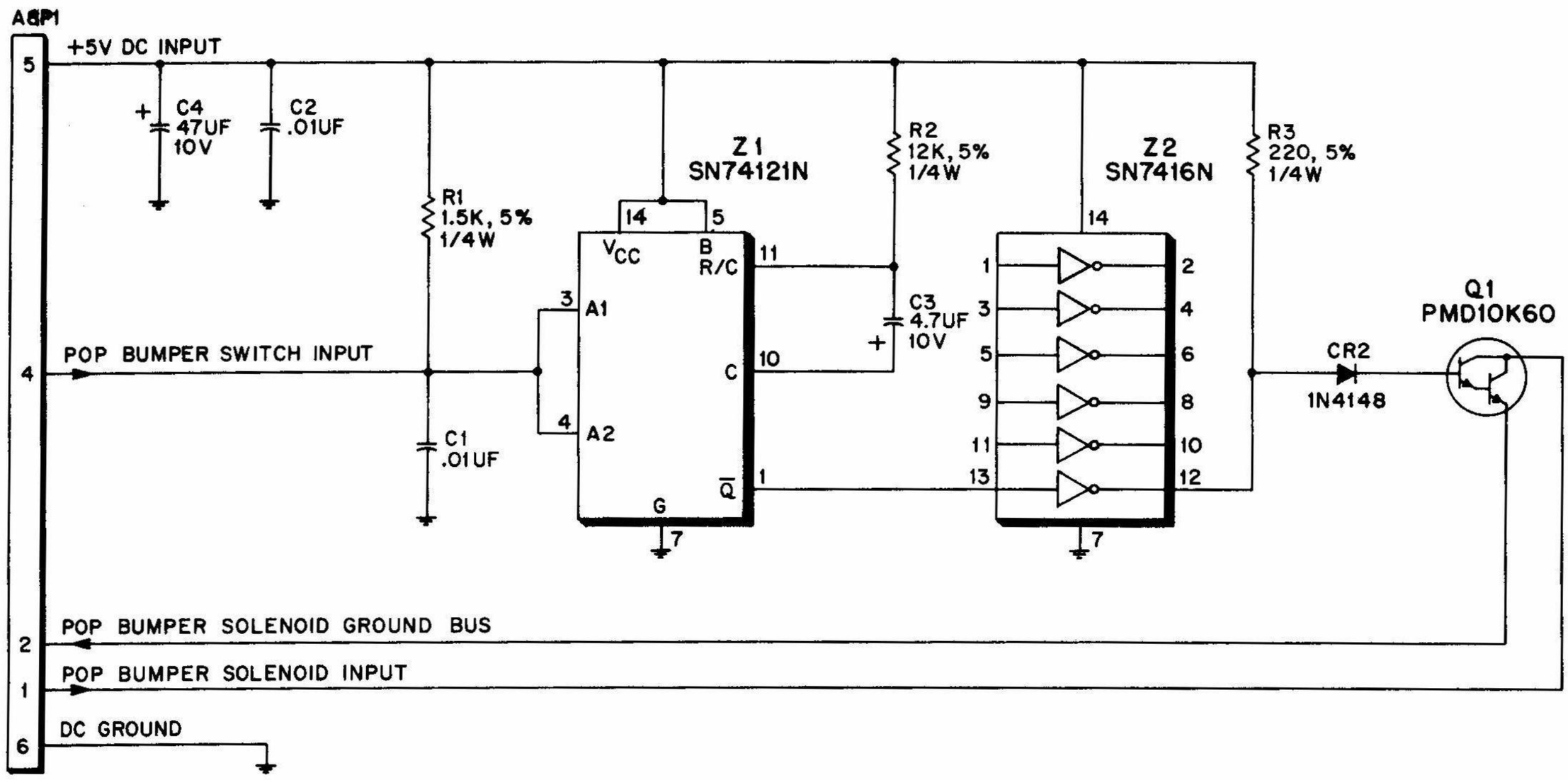

D. GOTTLIEB & CO.			
TITLE POP BUMPER DRIVER BOARD (A8)			
USED ON SYSTEM 80			
DRAWN	APPROVED BAM	DATE 2-9-81	D-20923

POP BUMPER DRIVER BOARD (A8) COMPONENT LOCATION

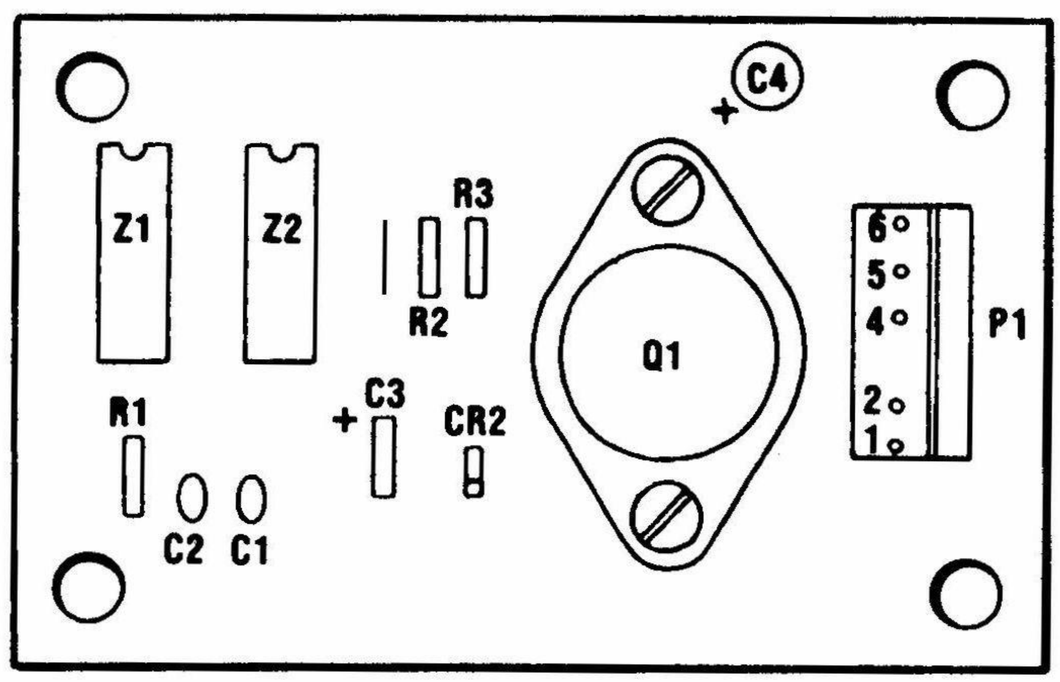

POP BUMPER DRIVER BOARD (A8) PARTS LIST

REFERENCE	DESCRIPTION	PART NUMBER
C1, C2	Capacitor, .01 mfd., 20%, 100V	
C3	Capacitor, 4.7 mfd., 10%, 10V	
C4	Capacitor, 47 mfd., 10V	
CR1, CR2	Diode	1N4148
P1	Connector	09-65-1061
R1	Resistor, 1.5K ohm, 5%, 1/4W	
R2	Resistor, 12K ohm, 5%, 1/4W	
R3	Resistor, 220 ohm, 1/4W, 5%	
Q1	Transistor—LAMBDA	PMD10K60
Z1	IC	SN74121N
Z2	IC	SN7416N

X. WIRING AND SCHEMATIC DIAGRAMS, PARTS LISTS

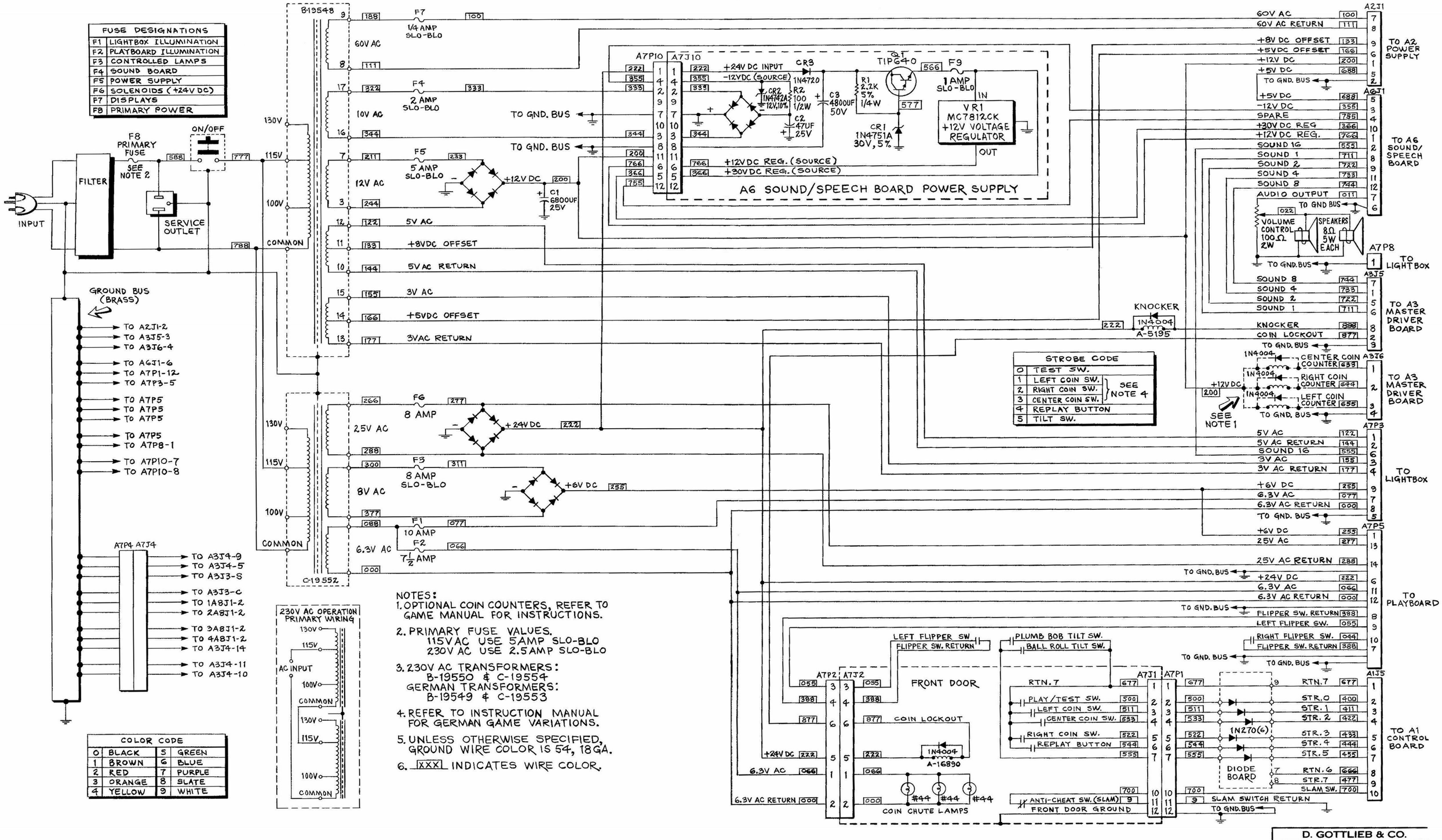

NOTES:

1. OPTIONAL COIN COUNTERS, REFER TO GAME MANUAL FOR INSTRUCTIONS.
2. PRIMARY FUSE VALUES.
   115VAC USE 5AMP SLO-BLO
   230V AC USE 2.5AMP SLO-BLO
3. 230V AC TRANSFORMERS:
   B-19550 & C-19554
   GERMAN TRANSFORMERS:
   B-19549 & C-19553
4. REFER TO INSTRUCTION MANUAL FOR GERMAN GAME VARIATIONS.
5. UNLESS OTHERWISE SPECIFIED, GROUND WIRE COLOR IS 54, 18GA.
6. [XXX] INDICATES WIRE COLOR.

D. GOTTLIEB & CO.

TITLE: BOTTOM BOARD AND CABINET

USED ON: SYSTEM 80

DRAWN	APPROVED	DATE	
		1-8-81	E-20918

POWER SUPPLY (A2) COMPONENT LOCATION

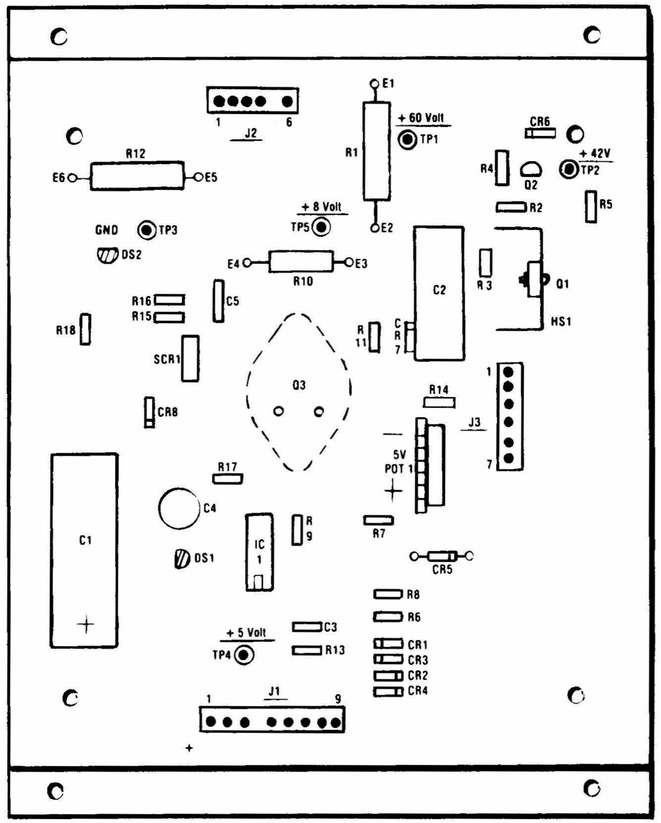

POWER SUPPLY (A2) PARTS LIST

REFERENCE	DESCRIPTION	PART NUMBER
C1	Capacitor, 470 mfd., 100V	
C2	Capacitor, 47 mfd., 100V	
C3	Capacitor, 1000 Picofarad, 50V	
C4	Capacitor, 470 mfd., 10V	
C5	Capacitor, 2 mfd., +80%, −20%, 16V	
CR1-CR4	Diode	1N4004
CR5	Diode, Zener, 62V, 5%, 1W	1N4759A
CR6	Diode, Zener, 18V, 5%, 1W	1N4746A
CR7	Diode, Zener, 8.2V, 10%, 2W	1N3445
CR8	Diode, Zener, 5.6V, 5%, 1W	1N4734A
DS1, DS2	Diode, Light Emitting	CM4-22
E1-E6	Turret Terminal	
IC1	I.C.—14 Pin Dip	UA723CN
J1	Connector, 9 Pin, Molex	
J2	Connector, 6 Pin, Molex	
J3	Connector, 7 Pin, Molex	
POT1	Potentiometer, 500 ohm, CTS	115R501A
Q1	Transistor, NPN, National	SW4F013
Q2	Transistor, NPN	2N5550
Q3	Transistor, Darlington, LAMBDA	PMD10K40
R1	Resistor, 1.3K ohm, 10%, 5W	
R2, R9	Resistor, 1K ohm, 5%, 1/4W	
R3	Resistor, 12K ohm, 5%, 1/2W	

REFERENCE	DESCRIPTION	PART NUMBER
R4	Resistor, 33 ohm, 5%, 1W	
R5	Resistor, 10K ohm, 5%, 1/2W	
R6, R13	Resistor, 510 ohm, 5%, 1/4W	
R7	Resistor, 3.9K ohm, 5%, 1/4W	
R8	Resistor, 10K ohm, 5%, 1/4W	
R10	Resistor, 30 ohm, 5%, 2W	
R11	Resistor, 2.2K ohm, 5%, 1/4W	
R12	Resistor, .33 ohm, 10%, 5W (Wirewound)	
R14	Resistor, 2K ohm, 5%, 1/4W	
R15	Resistor, 100 ohm, 5%, 1/4W	
R16	Resistor, 20 ohm, 5%, 1/4W	
R17	Resistor, 620 ohm, 5%, 1/2W	
R18	Resistor, 180 ohm, 5%, 1/4W	
SCR1	Silicon Controlled Rectifier	S107Y1
TP1-TP5,	Turret Terminal	
	Eyelet	GS2-3
	Heat Sink Mounting Plate	
	Heat Sink, Thermalloy	
	Insulator	INS-3
	Insulator	DM111
	Spacer—6-32 Thread x 5/32	
	Spacer—6-32 Thread x 1/8	

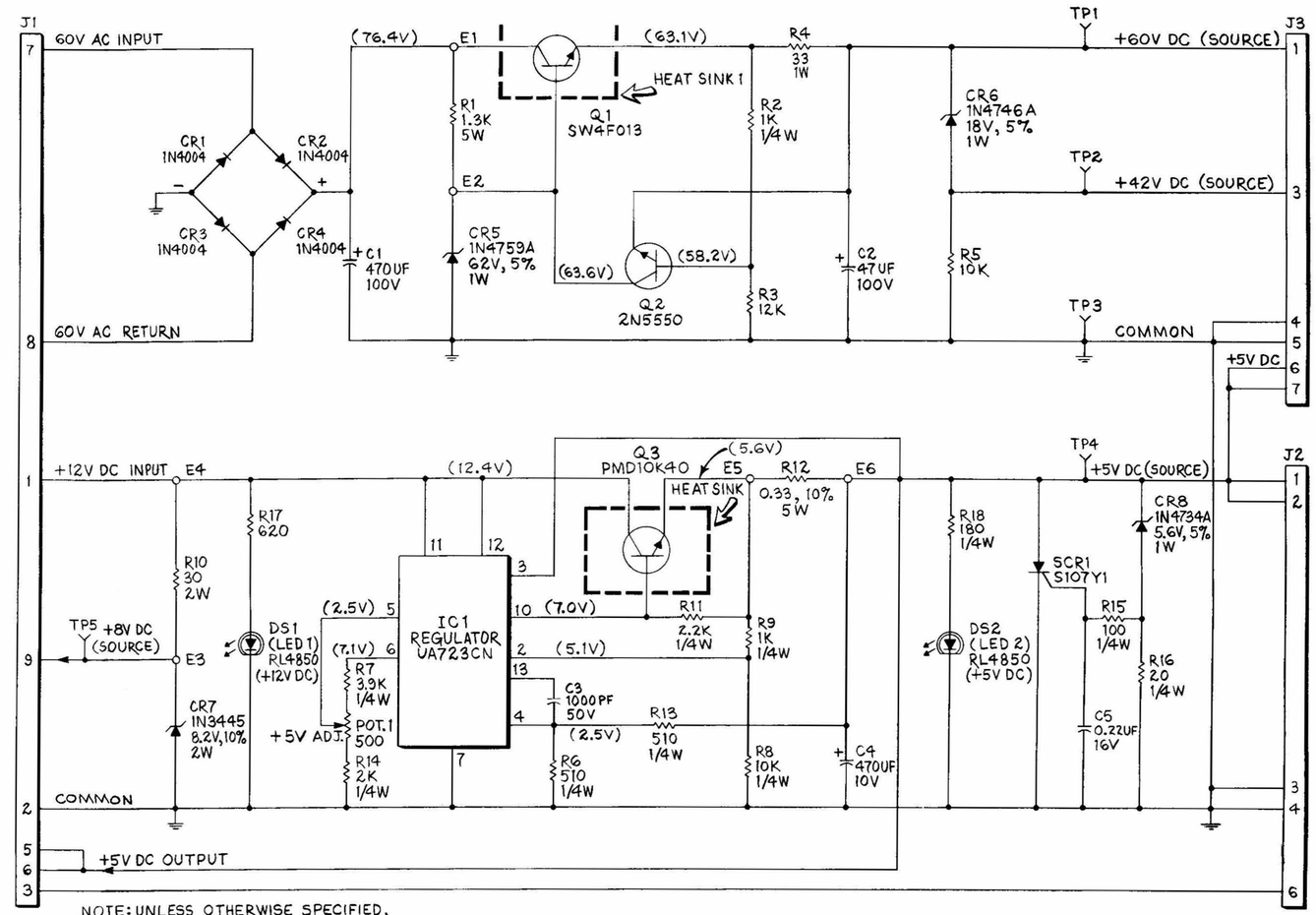

NOTE: UNLESS OTHERWISE SPECIFIED,
1. RESISTORS ARE ±5%, 1/2W.
2. VOLTAGES ARE DC WITH RESPECT TO CIRCUIT GROUND.
3. ALL VOLTAGES ARE AT NOMINAL LINE VOLTAGE (115V AC).

D. GOTTLIEB & CO.			
TITLE / USED ON	POWER SUPPLY (A2) SYSTEM 80		
DRAWN	APPROVED	DATE	E-20922
[illegible]	BAM	2-3-81	

X. WIRING AND SCHEMATIC DIAGRAMS, PARTS LISTS

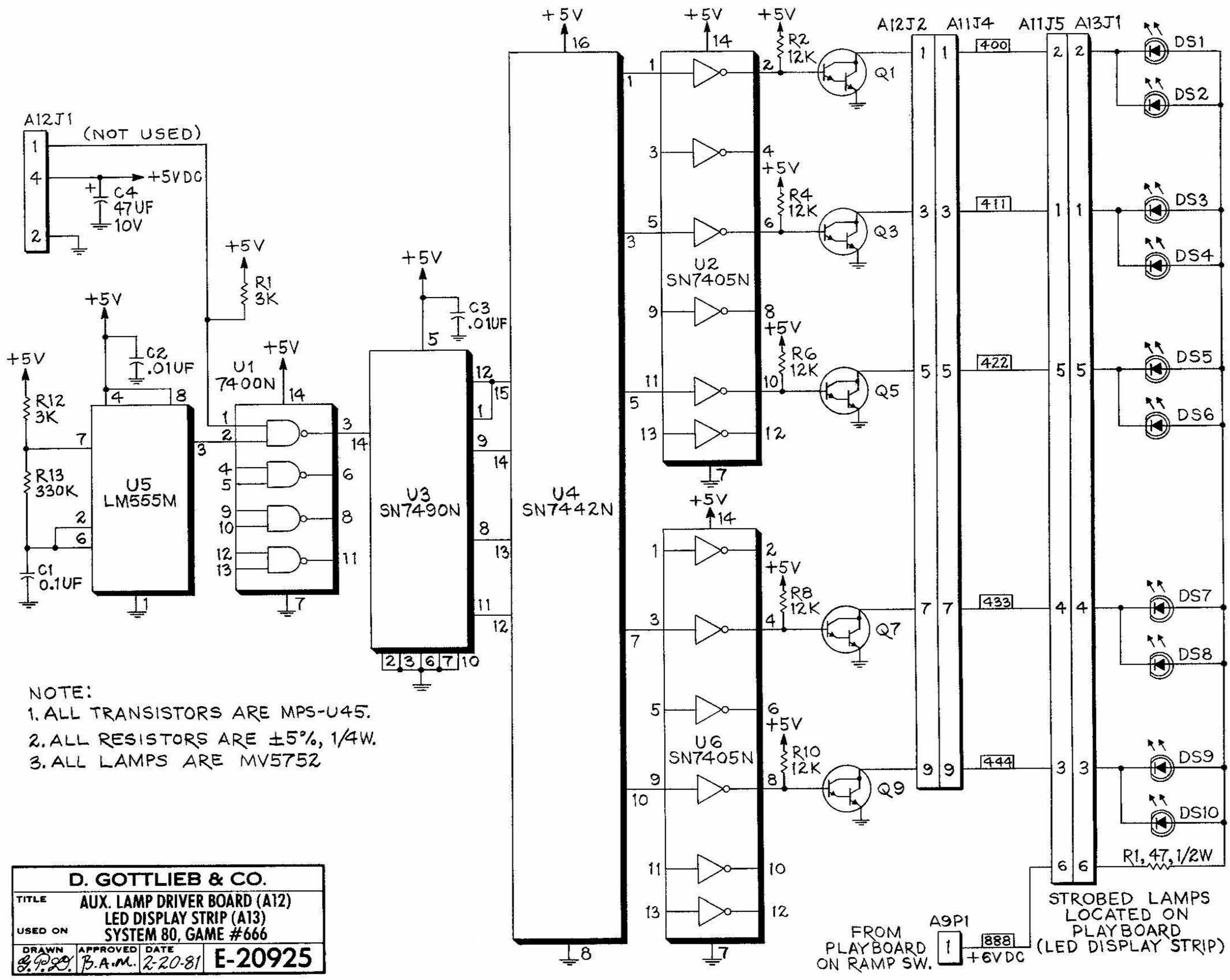

NOTE:
1. ALL TRANSISTORS ARE MPS-U45.
2. ALL RESISTORS ARE ±5%, 1/4W.
3. ALL LAMPS ARE MV5752

D. GOTTLIEB & CO.			
TITLE	AUX. LAMP DRIVER BOARD (A12) LED DISPLAY STRIP (A13)		
USED ON	SYSTEM 80, GAME #666		
DRAWN	APPROVED	DATE	E-20925
G.P.D.	B.A.M.	2-20-81	

AUXILIARY LAMP DRIVER BOARD (A12) COMPONENT LOCATION

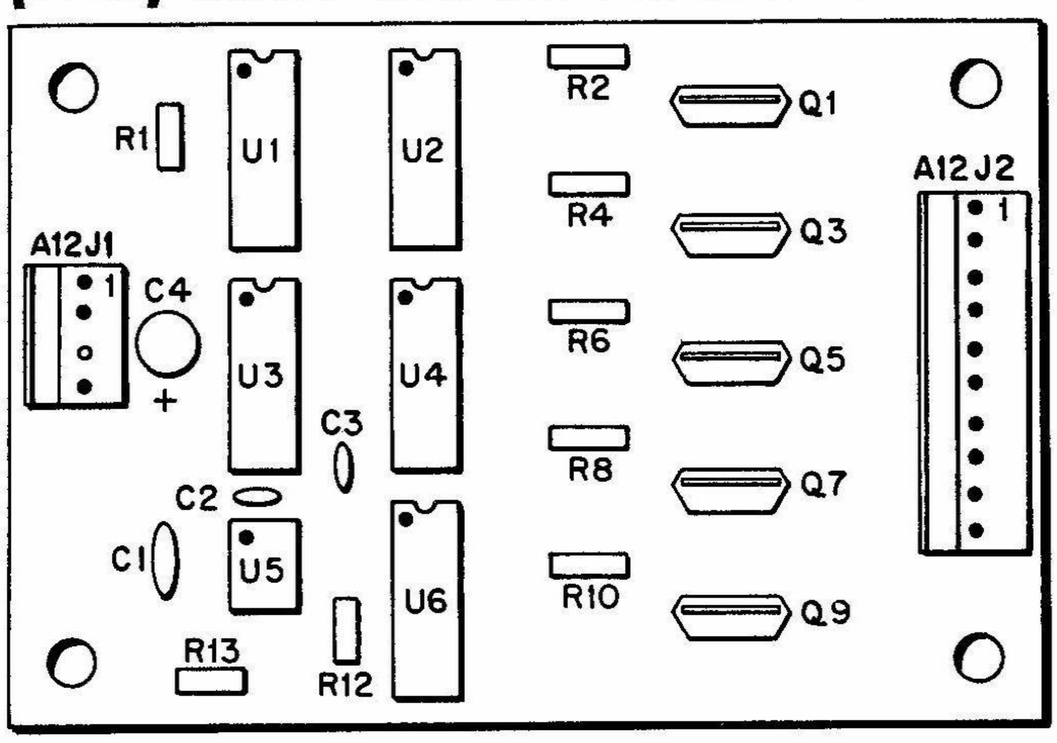

AUXILIARY LAMP DRIVER BOARD (A12) PARTS LIST

REFERENCE	DESCRIPTION	PART NUMBER
C1	CAPACITOR, .1 MFD, 100V CERAMIC RADIAL LEAD	
C2-C3	CAPACITOR, .01 MFD, 100V RADIAL LEAD	
C4	CAPACITOR, 47 MFD, 10V ELECTROLYTIC RADIAL LEAD	
Q1, Q3, Q5, Q7, Q9	TRANSISTOR, NPN DARLINGTON	MPS-U45
R1, R12	RESISTOR, 3K OHM, 5%, 1/4 W	
R2, R4, R6, R8, R10	RESISTOR, 12 K OHM, 5%, 1/4 W	
R13	RESISTOR, 330K OHM, 5%, 1/4 W	
U1	I.C. 2-INPUT NAND	SN7400N
U2, U6	I.C. INVERTER	SN7405N
U3	I.C. DECADE COUNTER	SN7490N
U4	I.C. DECODER	SN7442N
U5	I.C. TIMER	LM555N
	10 POS. SQUARE WIRE FRICTION LOCK CONNECTOR	
	4 POS. SQUARE WIRE FRICTION LOCK CONNECTOR	

LED DISPLAY STRIP (A13) COMPONENT LOCATION AND PARTS LIST

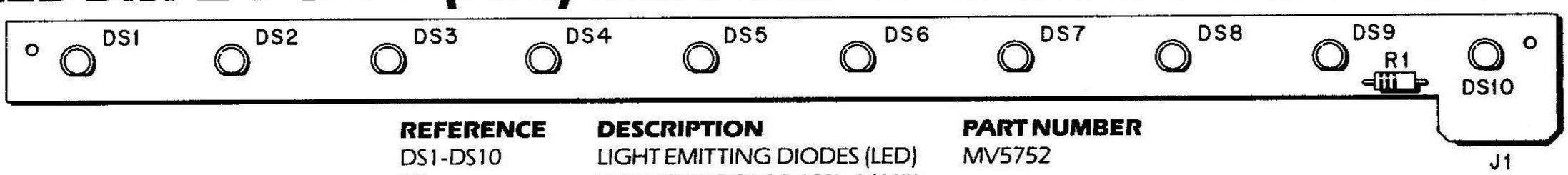

REFERENCE	DESCRIPTION	PART NUMBER
DS1-DS10	LIGHT EMITTING DIODES (LED)	MV5752
R1	RESISTOR 47 OHM, 10%, 1/4 W	

ON TARGET

Gottlieb

TECHNICAL NEWSLETTER VOLUME 2, ISSUE 5 MAY, 1981

MARS STARGATE

The stargate feature on MARS, god of war, is located on the left side of the playfield at the beginning of the launch tube (See Figure 1).

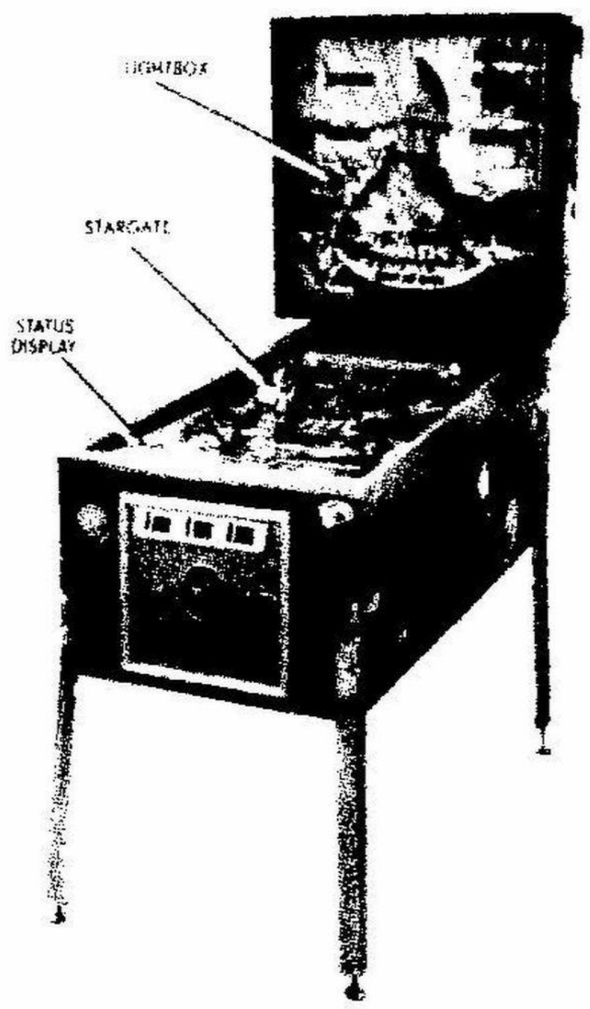

Figure 1

GAME PLAY - There are two ways to activate the stargate feature:
1. When either warbase is captured, the stargate is lowered and the plastic tube LED's are strobed. When left or right warbase is captured and the stargate drops, the sound/speech board says, "Shoot Stargate for Hyperforce."
2. If no ball is captured, a ball that travels through the right return rollover will lower the stargate. If the ball enters the launch lane through the plastic tube or from the playfield before hitting a pop bumper, the player will be awarded 50,000 points. Hitting a pop bumper ends the stargate feature, with the stargate returning to the up position.

OPERATION - Stargate Operation is shown in Figure 2A. The coil is activated when the stargate is in the up position and de-activated when the stargate is lowered. The coil activates when 5 volts is applied to the base of Q9. This turns on Q9, which supplies a ground to the base of the 2N5875 PNP transistor. This forward bias voltage turns on the 2N5875, which supplies a ground to the coil circuit, resulting in coil activation. The 24 VDC voltage generates a current that passes through the end-of-stroke switch and the low resistance windings of the ramp coil (direction indicated by the solid line). The plunger is pulled into the coil core with the end-of-stroke switch contacts opening approximately 1/16" before the full plunger stroke. The 24 VDC is now applied to the full winding, decreasing the current (direction indicated by dashed line).

(continued on p. 2)

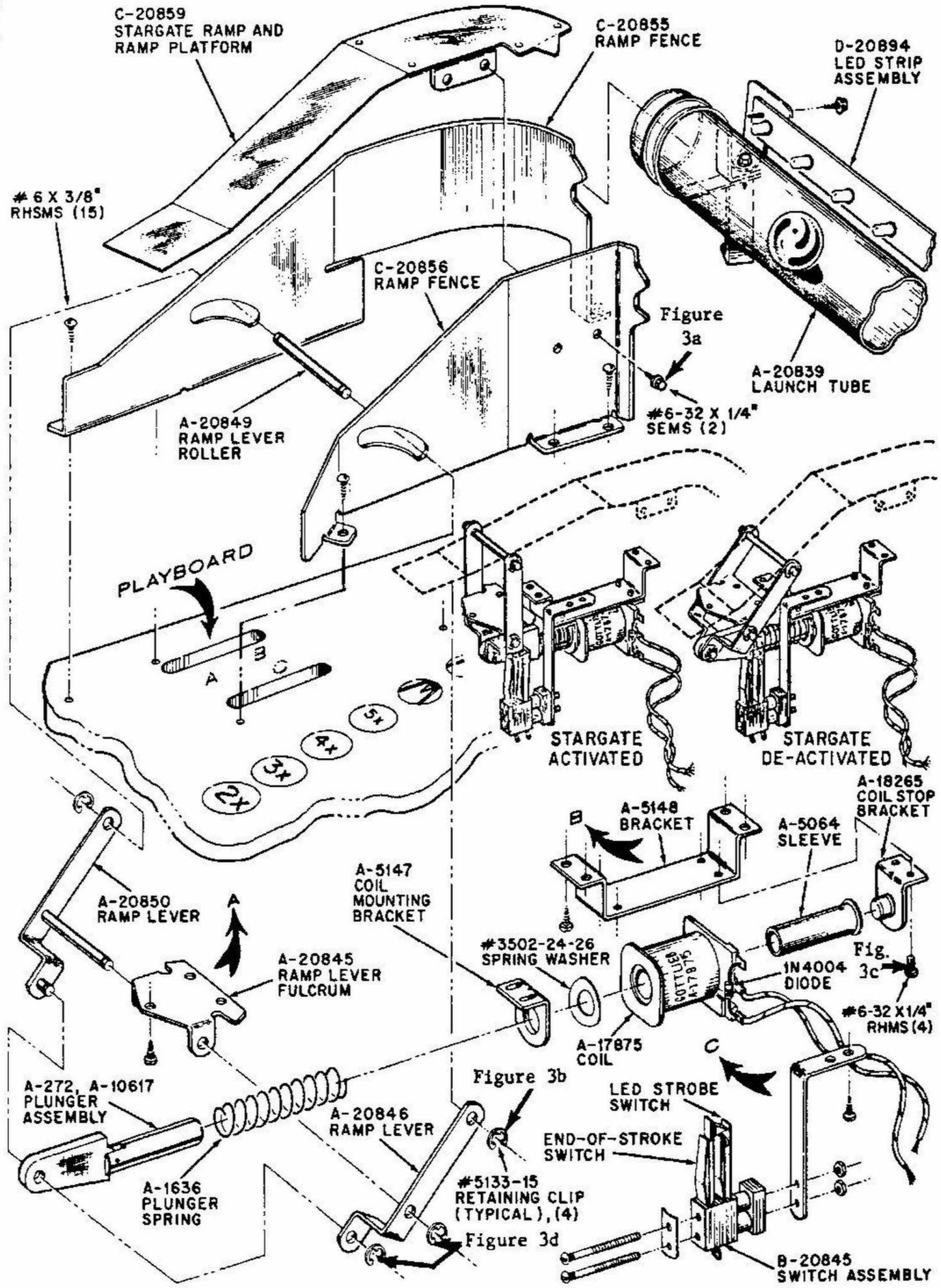

Figure 2

MARS STARGATE

(continued from p. 1)

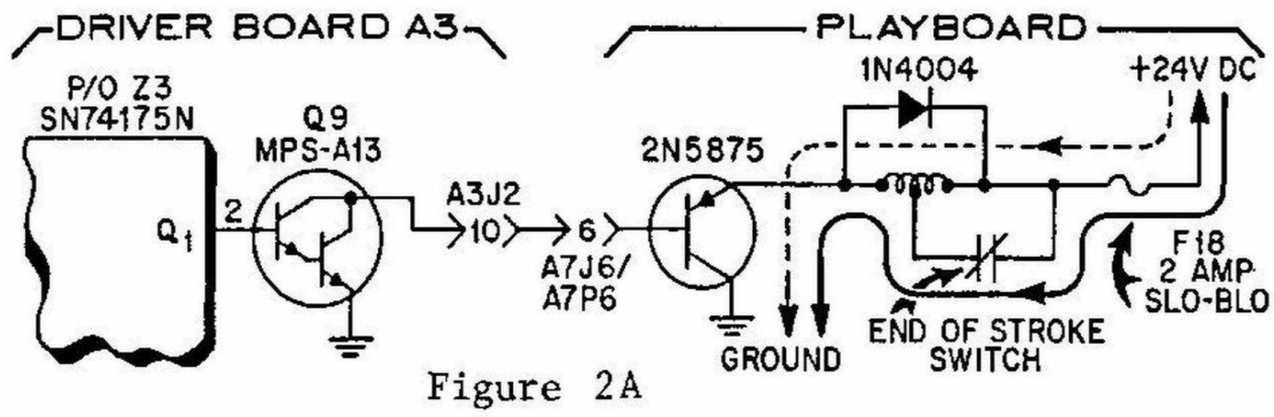

Figure 2A

Poor coil response or a coil burnout may result if the end-of-stroke switch is not adjusted as mentioned above.

Zero volts at the Q9 base keeps Q9 off. This, in turn, prevents the 2N5875 from conducting and activating the coil.

A second switch located with the end-of-stroke switch, turns on the LED strobes for the launch tube. When the coil is de-energized (the ramp lowered), this switch closes and the LED's begin to strobe. The LED's will continue to strobe until the ramp is raised, opening the switch.

The 1N4004 diode across the ramp coil suppresses transient voltage spikes created when the magnetic field in the coil collapses (the coil is de-energized).

To disassemble the stargate or remove the coil, the following tools are required:

A. 5/16" nut driver
B. 1/4" nut driver
C. Flat blade screwdriver
D. Soldering iron (coil only)

REPLACING STARGATE RAMP AND/OR RAMP LEVER ROLLER

1. Unplug power cord.
2. Follow standard procedure for removing the playfield glass.
3. Using the 5/16" nut driver, remove the nuts securing both plastic shields from either side of the stargate (2 nuts per shield).
4. Remove the plastic shields.
5. Remove the two 6/32 x 1/4" hex head screws located on the side of the ramp fence closest to the center of the playfield (See Figure 3a). A 1/4" nut driver or a flat blade screwdriver can be used.
6. Remove the ramp by lifting out with a slight clockwise turn.

RAMP LEVER ROLLER REMOVAL - With the stargate ramp removed, the ramp lever roller is now exposed and removal is simple:

1. Remove the two retaining rings (P/N 5133-15) located on either end of the ramp lever roller (See Figure 3b).
2. Slide roller out toward the center of the playfield.

RAMP LEVER - With the ramp lever roller removed, removal of the ramp lever is now possible. To remove the ramp lever:

1. Raise and secure the playfield.
2. Locate the stargate assembly.
3. Remove the two retaining clips located on the left ramp lever (Figure 3d).
4. Remove the three round head wood screws securing the ramp lever fulcrum to the playfield.
5. With the fulcrum freed, the right ramp lever can now be removed.

Ramp, ramp lever roller, and ramp lever are now removed. To reassemble follow directions in reverse order.

COIL REPLACEMENT

1. Follow Steps 1 and 2 for replacement of stargate ramp.
2. Raise and secure the playfield.
3. Locate the ramp coil (A-17875).
4. Unsolder the coil wires, noting their terminal designations. (Also make sure the new coil has a diode across it and in the proper direction.)
5. Remove the two 6/32 x 1/4" round head screws securing the coil stop bracket (See Figure 3c).
6. Lift coil assembly out of the coil stop bracket.
7. Pull the coil away from the plunger assembly. (Be careful of loose parts.)
8. Pull the plastic sleeve out of the bad coil and insert it into the new one.
9. Slide the new coil into the plunger assembly, insuring that the spring washer slides over the plastic sleeve.
10. Replace and screw the coil stop bracket into place.
11. Solder the wires to their proper terminals.

Once the new coil is installed, check the end-of-stroke switch for proper operation as described in the electrical section.

Lower the playfield and close up the game. Be sure to check the operation of the stargate to insure everything was reassembled correctly.

FLASHBACK

Pinball's first spot target appeared on a Gottlieb game made in January 1950 called JUST 21. Since then, Gottlieb has been first with almost every new target: the two-switch bull's-eye target, first used on HARBOR LITES (Feb 1956); the roto unit, used initially on MAJESTIC (April 1957); the vari-target, seen first on AIRPORT (April 1969).

© 1981 D. Gottlieb & Co.
All Rights Reserved
Printed in U.S.A.

ON TARGET
Gottlieb

Gottlieb Amusement Games
165 W. Lake Street
Northlake IL 60164

How to play MARS, god of war

HYPERFORCE Multi-ball play

- Completing center drop target bank activates left captive hole. ACTIVATE WARBASE lamp flashes.
- Completing right drop target bank activates right captive hole. ACTIVATE WARBASE lamp flashes.
- When either WARBASE is captured, the STARGATE is lowered and the plastic tube LED's are strobed.
- After a ball is captured in either captive hole, a ball is kicked to the ball shooter.
- The LAUNCH ball kicker lane flashes. This indicates that if a ball enters the lane either through the plastic tube or from the playfield, it and any captive ball(s) will be released for multi-ball play.
- Multi-ball play with two balls is achieved when either captive hole captures a ball and the next ball enters the LAUNCH ball kicker lane. The WARP I lamp turns on, indicating that all playfield scoring is 3X (3 times) the value of normal one-ball play. Playfield scoring reverts to normal one-ball scoring when a ball enters the outhole. WARP I lamp turns off.
- Multi-ball play with three balls is achieved when two balls are captured and the third ball enters the LAUNCH ball kicker lane. The WARP II lamp turns on, indicating that all playfield scoring is 5X (5 times) normal one-ball play. When the first ball enters the outhole, playfield scoring drops to WARP I value. WARP II lamp turns off and WARP I lamp turns on. When the second ball enters the outhole, the WARP I lamp turns off and one-ball play resumes.

- During multi-ball play, captive holes (WARBASES) cannot capture a ball. ACTIVATE WARBASE lamps remain off.
- If multi-ball is not achieved during a ball-in-play, all captive balls are released and will enter the outhole before the next ball is kicked to the ball shooter.
- Activated WARBASES for capturing balls are remembered from ball-to-ball.

Gottlieb™
AMUSEMENT GAMES

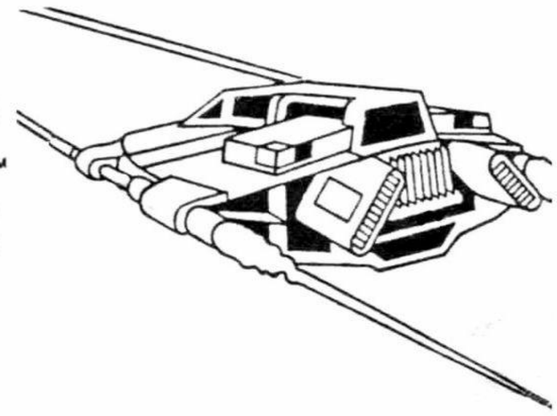

STARGATE FEATURE

- If no ball is captured, a ball that travels through the right return rollover will lower the STARGATE. If the ball enters the LAUNCH lane through the plastic tube or from the playfield before hitting a pop bumper, the player will be awarded 50,000 points. Hitting a pop bumper ends the STARGATE feature.

LAST CHANCE FEATURE

- A captive ball will become a ball-in-play when the player's last ball-in-play enters the outhole through a side out lane. The last chance feature does not occur if an extra ball has been won.
- If one ball is captive, it will be released for play when the player's ball exits either out lane.
- If two balls are captive, only one ball will be released corresponding to the out lane the player's ball exits.
- The LAST CHANCE feature can be disabled with game adjustment switch #31 in the off position.

EXTRA BALL

Entering a WARBASE when the warbase Extra Ball lamp is lit:

- Left WARBASE lights upper left return rollover for EXTRA BALL.
- Right WARBASE lights right spot target for EXTRA BALL.

SPECIAL

Entering a WARBASE when the warbase Special lamp is lit:

- Left WARBASE will light left outlane for SPECIAL.
- Right WARBASE will light right outlane for SPECIAL.
- Specials can be relit on the same ball-in-play.

MULTIPLIERS

- Bonus multipliers (BONUS BLASTERS) and WARBASE score multipliers are advanced by either completing the M-A-R-S rollover sequence or entering the LAUNCH lane.
- When the multiplier reaches 5X, the M-A-R-S rollovers remain unlit, and all pop bumpers are lit.

ROLLOVERS AND SPOT TARGET

Top Rollovers and Lower Return Rollovers

- Score 100 points unlit.
- Score 1000 points and ADD BONUS when lit.
- Two lower return rollovers spot the A and R of M-A-R-S.
- M-A-R-S sequence remembered from ball-to-ball.

Outlane Rollovers

- Score 5000 points and ADD BONUS.
- Award SPECIAL when lit.
- Award LAST CHANCE feature on last ball.

Spot Target and Upper Left Return Rollovers

- Score 500 points.
- Award EXTRA BALL when lit.

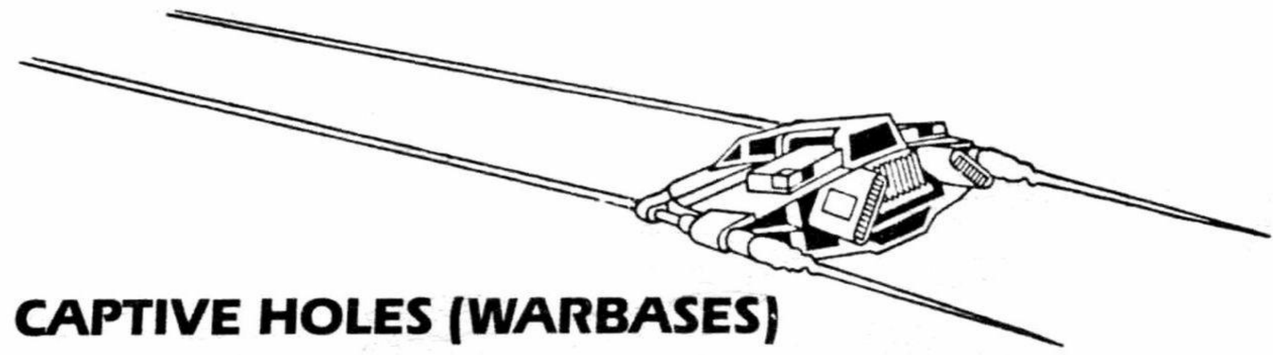

CAPTIVE HOLES (WARBASES)

- Score 1000 points unlit.
- Score 2000-5000 points when 2X-5X lamps are lit.
- Capture ball when ACTIVATE WARBASE lamp is flashing.
- See **EXTRA BALL** and **SPECIAL.**

10-POINT SWITCHES—Score 10 points.

SPINNER

- Score 100 points unlit.
- Score 1000 points and ADD BONUS when lit.
- Advance spinner lights (See **DROP TARGETS**).
- Spinner lights remembered from ball-to-ball (3-ball only).

POP BUMPERS

- Score 100 points unlit.
- Score 1000 points when lit.

LAUNCH lane (upper right ball kicker)

- Score 5000 points, ADD BONUS, and advance MULTIPLIER.
- Launch captive balls when flashing.
- Awards 50,000 points for STARGATE FEATURE.

DROP TARGETS

- Score 100 points unlit.
- Score 1000 points when lit.
- Add BONUS.
- Light corresponding spinner lamp.
- Completed target bank resets.
- See MULTI-BALL PLAY.

OTHER FEATURES

- Right flipper buttons rotates M-A-R-S and rotates pop bumper lights.
- 3-Ball Play:
  - Bonus maximum is 29,000 points.
  - Game Adjustment Switch #32:
    - ON (Liberal)—Light warbase Special lamp when multiplier reaches 4X.
      Light warbase Extra Ball lamp when multiplier reaches 3X.
    - OFF (Conservative)—Light warbase Special lamp when multiplier reaches 5X.
      Light warbase Extra Ball lamp when multiplier reaches 4X.
- 5-Ball Play:
  - Bonus maximum is 19,000 points.
  - Light warbase Special lamp when multiplier reaches 5X.
  - Light warbase Extra Ball lamp when multiplier reaches 4X.

HIGH GAME TO DATE

- If the High Game To Date is 990,000 or greater at the start of a new game, the High Game To Date will automatically reset to 770,000.

©1981 D. Gottlieb & Co.
All Rights Reserved
Printed in U.S.A.